FIXTURE SCHEDULE

TYPE	LOCATION	MANUFACTURER AND CATALOG NUMBER (OR APPROVED EQUAL)	DESCRIPTION	MOUNTING		LAMPS	
				TYPE	HEIGHT	NO.	WATTS
A	GANGWAY	GARDCO: ELG–70LA–NW–UNIV–NP	16" SQUARE CANOPY LED, DIE CAST HOUSING, TYPE 5 LIGHT DISTRIBUTION, 390mA,120V DRIVER WITH NATURAL ALUMINUM FINISH.	CEILING	9'–0"	N/A	70W LED
B	TRESTLE, BOARDING FLOAT	GARDCO: GL18–1–3–95LA–NW–120V–WP–PC POLE: SSS4–12'–4–11–D1–WP	18"Wx7"Hx32"D POLE MOUNTED LED AREA TYPE III DISTRIBUTION, DIE CAST ALUMINUM HOUSING, 520mA, 120V DRIVER, NEUTRAL WHITE 6000K LED WITH WHITE PAINT FINISH AND PHOTOCONTROL. 12' SQUARE STEEL POLE, WHITE FINISH.	POLE	12'–0"	N/A	95W LED

LINETYPE SCHEDULE

————	BOLD, SOLID LINES INDICATE NEW WORK
————	THIN, SOLID LINES INDICATE EXISTING WORK TO REMAIN
- - - - - - - - - -	DASHED OR DOTTED LINES INDICATE WORK TO BE DEMOLISHED

EXISTING SHORE POWER PEDESTAL SCHEDULE

TYPE	SHORE RECEPTACLES			TRANSIENT / MAINT.			PEDESTAL METER QTY.
	QTY.	AMP	VOLTAGE	QTY.	AMP	VOLTAGE	
	1	30	120V,1ø	–	–	–	1
*** t	1	30	120V,1ø	1	30	120V,1ø	1
	2	30	120V,1ø	–	–	–	2
*** t	2	30	120V,1ø	1	30	120V,1ø	2
*** t	2	30	120V,1ø	1 1	50 a30	120/208V,1ø 120V,1ø	2
** *** t	1 1	50 30	120/208V,1ø 120V,1ø	1	30	120V,1ø	1
***	1 1	50 a30	120/208V,1ø 120V,1ø	–	–	–	2
	1	b30	120V,1ø				
*** t	1 1	50 a30	120/208V,1ø 120V,1ø	1 1	50 a30	120/208V,1ø 120V,1ø	2
	1	b50	120/208V,1ø				
** *** t	1 1	50 30	120/208V,1ø 120V,1ø	1 1	50 30	120/208V,1ø 120V,1ø	1
** *** t	1 1	60 30	120/208V,3ø 120V,1ø	1	50	120/208V,1ø	1
** *** t	1 1	60 50	120/208V,3ø 120/208V,1ø	1	30	120V,1ø	1
** *** t	1 1	60 30	120/208V,3ø 120V	1	50	120/208V,1ø	1

* TRANSIENT / MAINTENANCE RECEPTACLE NOT METERED AT PEDESTAL.

** SHORE POWER RECEPTACLES ON THE SAME METER.

*** LOWERCASE 't' DESIGNATES LOCATION ON SHEET E3.1 THAT PEDESTAL HAS A TRANSIENT / MAINTENANCE RECEPTACLE.

'a,b' DESIGNATES NUMBER OF RECEPTACLES ON SAME CIRCUIT.

NEW SHORE POWER PEDESTAL SCHEDULE

	TYPE	SHORE RECEPTACLES			TRANSIENT / MAINT.			METER QTY.
		QTY.	AMP	VOLTAGE	QTY.	AMP	VOLTAGE	
1	*	1 1	100 50	120/208V,3ø 120/208V,1ø				1
2	*	1 1	60 30	120/208V,3ø 120V	1	50	120/208V,1ø	1

* SHORE POWER RECEPTACLES ON THE SAME METER.

LEGEND

	LIGHT FIXTURE – SURFACE MTD
	LIGHT FIXTURE – SURFACE MTD ON WALL
	DOCK AND TRESTLE LIGHT
	DUPLEX RECEPTACLE WITH GROUND FAULT CIRCUIT INTERRUPTER
	SECURITY CAMERA
PD	PAN TILT ZOOM CAMERA
A	FIXTURE TAG (LETTER INDICATES TYPE)
	CONDUIT, CONCEALED
#10	NUMBER AND SIZE OF WIRES
A–2	HOMERUN TO PANEL (PANEL AND CIRCUIT No.)
—OH/E—	OVERHEAD ELECTRICAL LINE
	NEW PANEL
	EXISTING PANEL
	DISCONNECT SWITCH (FUSED)
J	JUNCTION BOX
	UTILITY TRANSFORMER
1	NOTE TAG (No. INDICATES NOTE)
AL	ALUMINUM
C	CONDUIT
CO	CONDUIT ONLY
CU	COPPER
E	DENOTES EXISTING ITEM
EM	DENOTES EMERGENCY POWER
GFCI	GROUND FAULT CIRCUIT INTERRUPTER
GRSC	GALVANIZED RIGID STEEL CONDUIT
IAW	IN ACCORDANCE WITH
LED	LIGHT EMITTING DIODE
MAINT.	MAINTENANCE
MCB	MAIN CIRCUIT BREAKER
MLO	MAIN LUGS ONLY
NEC	NATIONAL ELECTRICAL CODE
QTY.	QUANTITY
TYP	TYPICAL
R	DENOTES EXISTING ITEM THAT HAS BEEN RELOCATED
UON	UNLESS OTHERWISE NOTED
WP	WEATHERPROOF

SHEET NOTES:

1. SEE 1/E4.1 TYPICAL SHORE POWER PEDESTAL DETAIL 'A'.
2. SEE 2/E4.1 TYPICAL SHORE POWER PEDESTAL DETAIL 'B'.

CONFORMED SET

RSA Engineering, Inc.
MECHANICAL AND ELECTRICAL CONSULTING ENGINEERS
2522 Arctic Boulevard, Suite 200
Anchorage, AK 99503 (907)272-0021
191 Swanson Avenue, Suite 100
Wasilla, Alaska 99654 (907)373-1021

STATE OF ALASKA
TIMOTHY E. HALL
EE-9131
REGISTERED PROFESSIONAL ENGINEER

URS
700 G STREET, SUITE 500
ANCHORAGE, AK 99501
TEL: (907)562-3366
FAX: (907)562-1297

REVISIONS

NO.	BY	DATE	DESCRIPTION

MUNICIPALITY OF SKAGWAY

SKAGWAY SMALL BOAT HARBOR
SKAGWAY, AK

ELECTRICAL LEGEND, LIGHT FIXTURE SCHEDULE AND SHORE POWER PEDESTAL LEGEND

PROJECT No:	26220909
DATE:	8/14/2012
DESIGNED:	MJC
DRAWN BY:	MJC
CHECKED BY:	TEH
SHEET:	E0.1

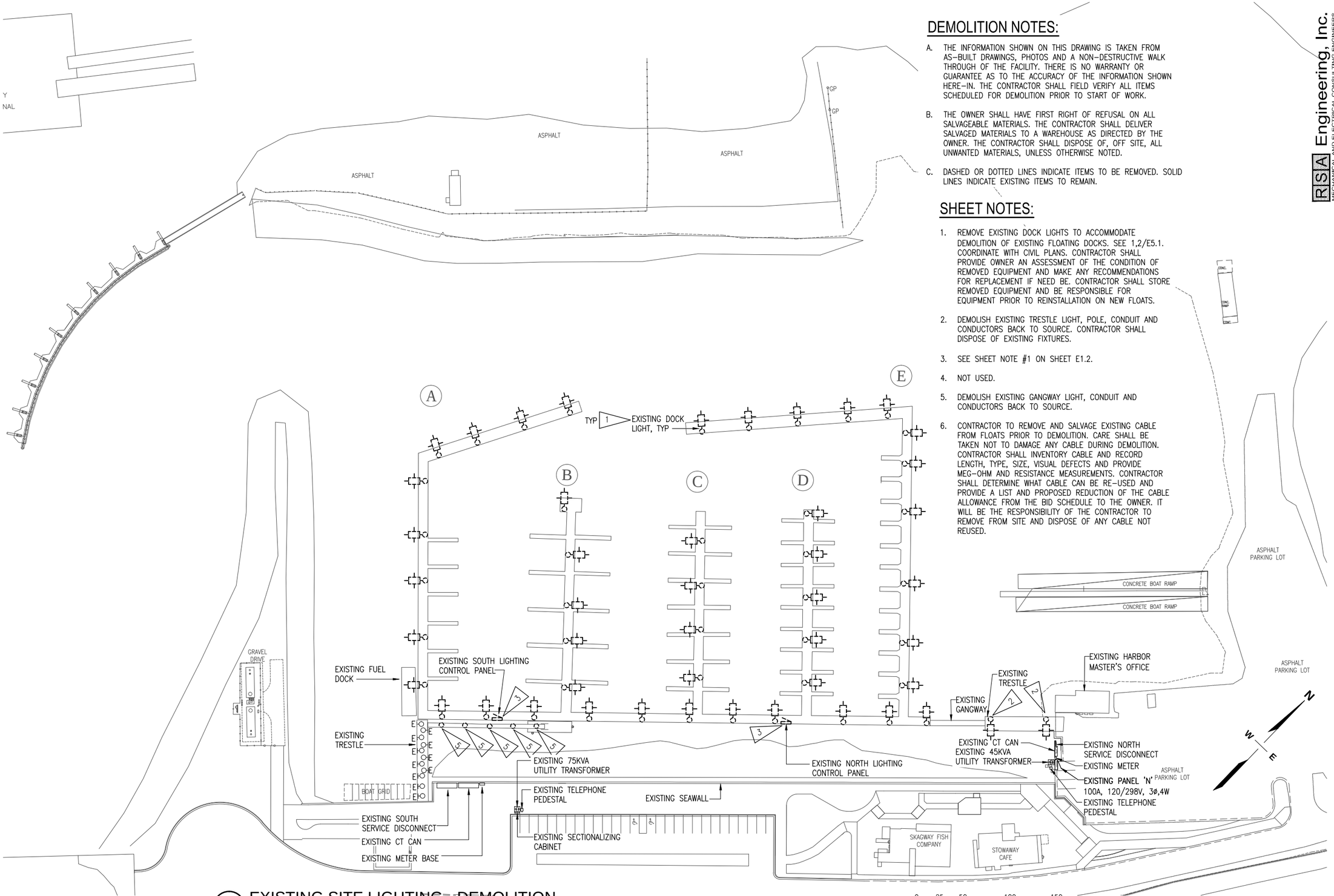

DEMOLITION NOTES:

A. THE INFORMATION SHOWN ON THIS DRAWING IS TAKEN FROM AS-BUILT DRAWINGS, PHOTOS AND A NON-DESTRUCTIVE WALK THROUGH OF THE FACILITY. THERE IS NO WARRANTY OR GUARANTEE AS TO THE ACCURACY OF THE INFORMATION SHOWN HERE-IN. THE CONTRACTOR SHALL FIELD VERIFY ALL ITEMS SCHEDULED FOR DEMOLITION PRIOR TO START OF WORK.

B. THE OWNER SHALL HAVE FIRST RIGHT OF REFUSAL ON ALL SALVAGEABLE MATERIALS. THE CONTRACTOR SHALL DELIVER SALVAGED MATERIALS TO A WAREHOUSE AS DIRECTED BY THE OWNER. THE CONTRACTOR SHALL DISPOSE OF, OFF SITE, ALL UNWANTED MATERIALS, UNLESS OTHERWISE NOTED.

C. DASHED OR DOTTED LINES INDICATE ITEMS TO BE REMOVED. SOLID LINES INDICATE EXISTING ITEMS TO REMAIN.

SHEET NOTES:

1. REMOVE EXISTING DOCK LIGHTS TO ACCOMMODATE DEMOLITION OF EXISTING FLOATING DOCKS. SEE 1,2/E5.1. COORDINATE WITH CIVIL PLANS. CONTRACTOR SHALL PROVIDE OWNER AN ASSESSMENT OF THE CONDITION OF REMOVED EQUIPMENT AND MAKE ANY RECOMMENDATIONS FOR REPLACEMENT IF NEED BE. CONTRACTOR SHALL STORE REMOVED EQUIPMENT AND BE RESPONSIBLE FOR EQUIPMENT PRIOR TO REINSTALLATION ON NEW FLOATS.

2. DEMOLISH EXISTING TRESTLE LIGHT, POLE, CONDUIT AND CONDUCTORS BACK TO SOURCE. CONTRACTOR SHALL DISPOSE OF EXISTING FIXTURES.

3. SEE SHEET NOTE #1 ON SHEET E1.2.

4. NOT USED.

5. DEMOLISH EXISTING GANGWAY LIGHT, CONDUIT AND CONDUCTORS BACK TO SOURCE.

6. CONTRACTOR TO REMOVE AND SALVAGE EXISTING CABLE FROM FLOATS PRIOR TO DEMOLITION. CARE SHALL BE TAKEN NOT TO DAMAGE ANY CABLE DURING DEMOLITION. CONTRACTOR SHALL INVENTORY CABLE AND RECORD LENGTH, TYPE, SIZE, VISUAL DEFECTS AND PROVIDE MEG-OHM AND RESISTANCE MEASUREMENTS. CONTRACTOR SHALL DETERMINE WHAT CABLE CAN BE RE-USED AND PROVIDE A LIST AND PROPOSED REDUCTION OF THE CABLE ALLOWANCE FROM THE BID SCHEDULE TO THE OWNER. IT WILL BE THE RESPONSIBILITY OF THE CONTRACTOR TO REMOVE FROM SITE AND DISPOSE OF ANY CABLE NOT REUSED.

1 EXISTING SITE LIGHTING - DEMOLITION

CONFORMED SET

RSA Engineering, Inc.
MECHANICAL AND ELECTRICAL CONSULTING ENGINEERS
2522 Arctic Boulevard, Suite 200
Anchorage, Alaska 99503 (907)272-0021
191 Swanson Avenue, Suite 100
Wasilla, Alaska 99654 (907)357-1021

STATE OF ALASKA
TIMOTHY E. HALL
EE-9131
REGISTERED PROFESSIONAL ENGINEER

URS
700 G STREET, SUITE 500
ANCHORAGE, AK 99501
TEL: (907)562-3366
FAX: (907)562-1297

REVISIONS

NO.	BY	DATE	DESCRIPTION

MUNICIPALITY OF SKAGWAY

SKAGWAY SMALL BOAT HARBOR
SKAGWAY, AK

EXISTING SITE LIGHTING - DEMOLITION

PROJECT No:	26220909
DATE:	8/14/2012
DESIGNED:	MJC
DRAWN BY:	MJC
CHECKED BY:	TEH
SHEET:	E1.1

DEMOLITION NOTES:

A. THE INFORMATION SHOWN ON THIS DRAWING IS TAKEN FROM AS-BUILT DRAWINGS, PHOTOS AND A NON-DESTRUCTIVE WALK THROUGH OF THE FACILITY. THERE IS NO WARRANTY OR GUARANTEE AS TO THE ACCURACY OF THE INFORMATION SHOWN HERE-IN. THE CONTRACTOR SHALL FIELD VERIFY ALL ITEMS SCHEDULED FOR DEMOLITION PRIOR TO START OF WORK.

B. THE OWNER SHALL HAVE FIRST RIGHT OF REFUSAL ON ALL SALVAGEABLE MATERIALS. THE CONTRACTOR SHALL DELIVER SALVAGED MATERIALS TO A WAREHOUSE AS DIRECTED BY THE OWNER. THE CONTRACTOR SHALL DISPOSE OF, OFF SITE, ALL UNWANTED MATERIALS, UNLESS OTHERWISE NOTED.

C. DASHED OR DOTTED LINES INDICATE ITEMS TO BE REMOVED. SOLID LINES INDICATE EXISTING ITEMS TO REMAIN.

SHEET NOTES:

1. REMOVE EXISTING SHORE POWER PEDESTALS AND FLOAT MOUNTED PANELS TO ACCOMMODATE DEMOLITION OF EXISTING FLOATS. SEE 1,2/E5.1. COORDINATE WITH CIVIL PLANS. CONTRACTOR SHALL PROVIDE OWNER AN ASSESSMENT OF THE CONDITION OF REMOVED EQUIPMENT AND MAKE ANY RECOMMENDATIONS FOR REPLACEMENT IF NEED BE. CONTRACTOR SHALL STOCKPILE REMOVED EQUIPMENT AND BE RESPONSIBLE OF EQUIPMENT. PRIOR TO REINSTALLATION ON NEW FLOATS. SEE E0.1 EXISTING SHORE POWER PEDESTAL LEGEND AND E3.1 TO HELP STOCK SHORE POWER PEDESTAL CONFIGURATIONS.
2. EXISTING SHORE POWER PEDESTAL DESIGNATION ON EXISTING FLOATING DOCKS. SEE 1,2/E5.1 FOR EXISTING CIRCUIT BREAKER LOCATION IN DISTRIBUTION PANELS.
3. DISCONNECT CABLE AND STORE ON EXISTING FUEL DOCK FOR RECONNECTION. SEE 2/E5.1 AND E3.1.
4. DISCONNECT AND RETAIN WELDING RECEPTACLE, CONDUIT AND CONDUCTORS FROM PANEL 'S2' AND SAVE FOR RE-USE. SEE 2/E5.1 AND E3.1.
5. CONTRACTOR TO REMOVE AND SALVAGE EXISTING CABLE FROM FLOATS PRIOR TO DEMOLITION. CARE SHALL BE TAKEN NOT TO DAMAGE ANY CABLE DURING DEMOLITION. CONTRACTOR SHALL INVENTORY CABLE AND RECORD LENGTH, TYPE, SIZE, VISUAL DEFECTS AND PROVIDE MEG-OHM AND RESISTANCE MEASUREMENTS. CONTRACTOR SHALL DETERMINE WHAT CABLE CAN BE RE-USED AND PROVIDE A LIST AND PROPOSED REDUCTION OF THE CABLE ALLOWANCE FROM THE BID SCHEDULE TO THE OWNER. IT WILL BE THE RESPONSIBILITY OF THE CONTRACTOR TO REMOVE FROM SITE AND DISPOSE OF ANY CABLE NOT REUSED.
6. REMOVE EXISTING TELEPHONE EQUIPMENT AND CABLING. COORDINATE DEMOLITION WITH LOCAL TELEPHONE UTILITY.
7. CONTRACTOR IS RESPONSIBLE TO PROVIDE TEMPORARY POWER TO EXISTING FUEL DOCK WHILE UNDER CONSTRUCTION. PROVIDE FEEDER OVERCURRENT PROTECTION AND FUSED DISCONNECT TO EXISTING SOUTH UPLAND SERVICE EQUIPMENT. COORDINATE WITH LOCAL UTILITY COMPANY, TEMPORARY POWER REQUIREMENTS PRIOR TO CONNECTING TEMPORARY POWER TO EXISTING FUEL DOCK.

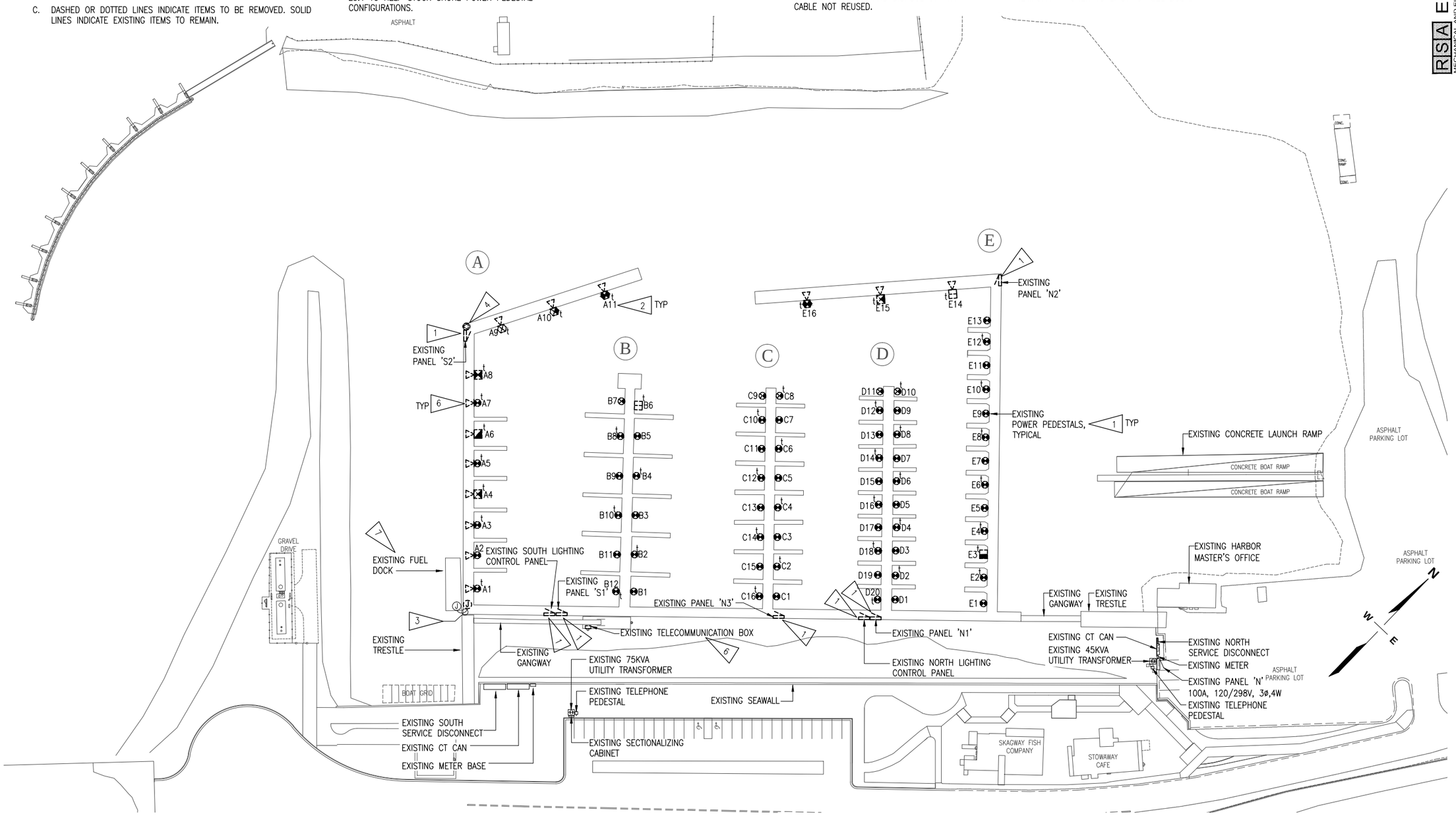

1 EXISTING SITE POWER AND SIGNAL - DEMOLITION

0 25 50 100 150
SCALE IN FEET
1"=50'

CONFORMED SET

RSA Engineering, Inc.
MECHANICAL AND ELECTRICAL CONSULTING ENGINEERS
2522 Arctic Boulevard, Suite 200
Anchorage, Alaska 99503 (907) 272-0021
191 Swanson Avenue, Suite 100
Wasilla, Alaska 99654 (907) 357-1021

URS
700 G STREET, SUITE 500
ANCHORAGE, AK 99501
TEL: (907)562-3366
FAX: (907)562-1297

STATE OF ALASKA 49TH TIMOTHY E. HALL EE-9131 REGISTERED PROFESSIONAL ENGINEER

REVISIONS

NO.	BY	DATE	DESCRIPTION

MUNICIPALITY OF SKAGWAY

SKAGWAY SMALL BOAT HARBOR

SKAGWAY, AK

EXISTING SITE POWER AND SIGNAL - DEMOLITION

PROJECT No:	26220909
DATE:	8/14/2012
DESIGNED:	MJC
DRAWN BY:	MJC
CHECKED BY:	TEH
SHEET:	E1.2
PAGE:	52 OF 71

FEEDER SCHEDULE (ALL CONDUCTORS SHALL BE COPPER)	
1	(1) 3#8, TYPE W OR G/GC CABLE
2	(1) 1"C, 2#10, 1#10GND – XHHW

GENERAL NOTES:

A. CONTRACTORS BID SHALL BE TO PROVIDE NEW FLEXIBLE CABLE TO RE-FEED EXISTING DOCK MOUNTED LIGHTING. SEE BID REQUIREMENTS FOR REUSE OF EXISTING CABLE.

B. ALL ELECTRICAL CONNECTIONS ON DOCK SHALL BE AT LEAST 12" ABOVE THE DECK BUT NOT BELOW THE ELECTRICAL DATUM LINE IAW NEC 555.9.

SHEET NOTES:

1. INSTALL AND CONNECT EXISTING DOCK LIGHTS AND POLES REMOVED DURING DEMOLITION. SEE E1.1.
2. MOUNT NEW LIGHT FIXTURE AND POLE TO NEW BOARDING FLOAT. WORK DONE UNDER ALTERNATE #1.
3. SEE 4/E4.2 FLOAT DOCK LIGHT POLE MOUNTING DETAIL.
4. CONNECT NEW TRESTLE LIGHTING CIRCUIT TO NEXT AVAILABLE EXISTING 20A, 1P SPARE CIRCUIT BREAKER IN EXISTING PANEL 'N'. SEE 1/E4.2 TRENCHING DETAIL.
5. MOUNT LIGHTS TO UNDER SIDE OF GANGWAY COVER. SEE E4.4. PROVIDE 5 SPARE LED LIGHT FIXTURES.
6. SEE LIGHT POLE MOUNTING DETAIL ON STRUCTURAL 3/ES3.13.

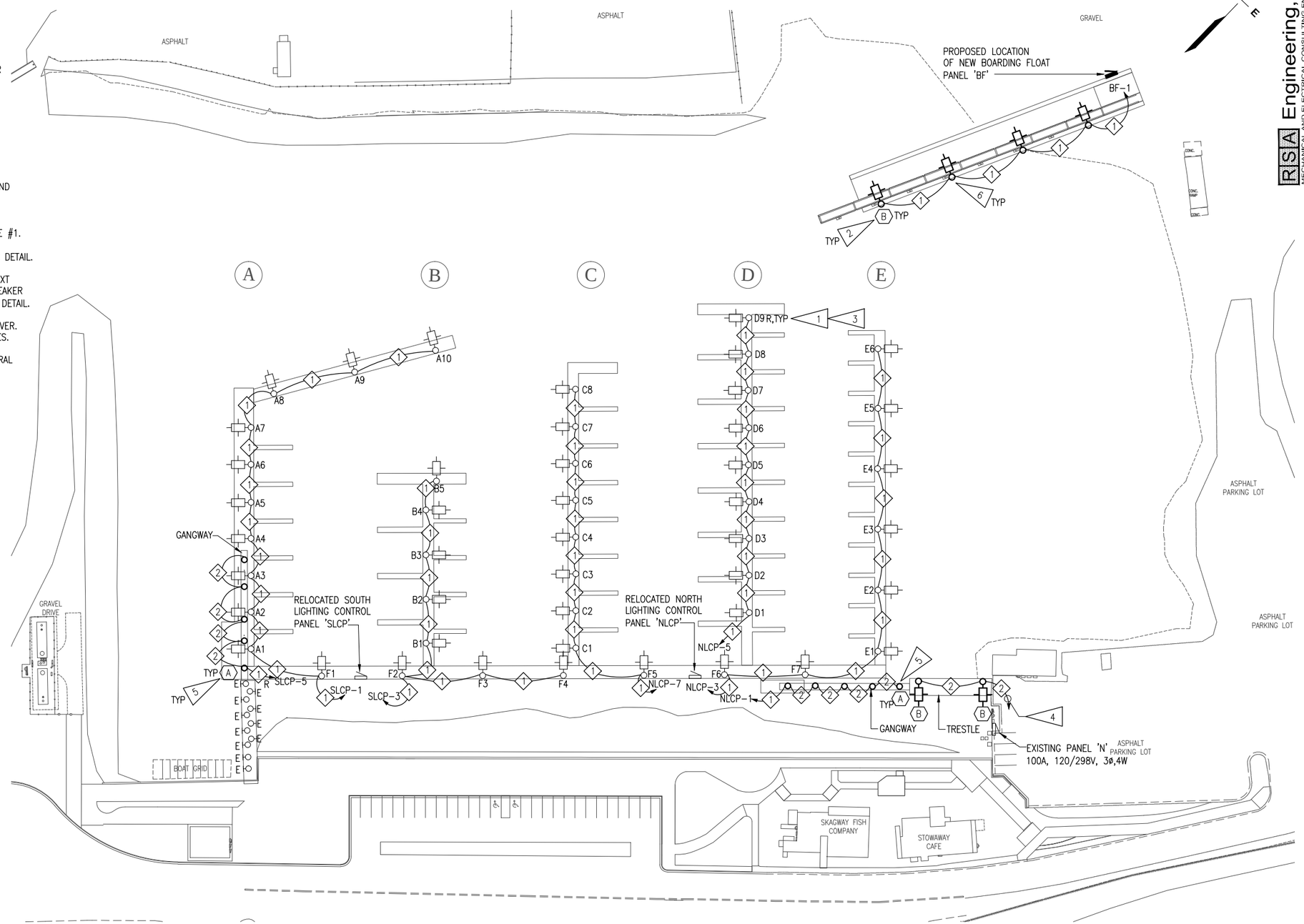

1 SITE LIGHTING - NEW WORK

0 25 50 100 150
SCALE IN FEET
1"=50'

CONFORMED SET

RSA Engineering, Inc.
MECHANICAL AND ELECTRICAL CONSULTING ENGINEERS
2522 Arctic Boulevard, Suite 200
Anchorage, Alaska 99503 (907) 272-4022
191 Swanson Avenue, Suite 100
Wasilla, Alaska 99654 (907) 352-1021

STATE OF ALASKA
TIMOTHY E. HALL
EE-9131
REGISTERED PROFESSIONAL ENGINEER

URS
700 G STREET, SUITE 500
ANCHORAGE, AK 99501
TEL: (907)562-3366
FAX: (907)562-1297

REVISIONS			
NO.	BY	DATE	DESCRIPTION

MUNICIPALITY OF SKAGWAY

SKAGWAY SMALL BOAT HARBOR

SKAGWAY, AK

SITE LIGHTING - NEW WORK

PROJECT No:	26220909
DATE:	8/14/2012
DESIGNED:	MJC
DRAWN BY:	MJC
CHECKED BY:	TEH
SHEET:	E2.1
PAGE:	53 OF 71

GENERAL NOTES:

A. CONTRACTORS BID SHALL BE TO PROVIDE NEW FLEXIBLE CABLE TO RE-FEED EXISTING DOCK MOUNTED DISTRIBUTION PANELS AND SHORE POWER PEDESTALS. SEE BID REQUIREMENTS FOR REUSE OF EXISTING CABLE.

B. ALL ELECTRICAL CONNECTIONS ON DOCK SHALL BE AT LEAST 12" ABOVE THE DECK BUT NOT BELOW THE ELECTRICAL DATUM LINE IAW NEC 555.9.

SHEET NOTES:

1. INSTALL AND CONNECT EXISTING SHORE POWER PEDESTALS REMOVED DURING DEMOLITION. SEE E1.2 AND E5.2.
2. INSTALL AND CONNECT EXISTING PANELBOARDS AND LIGHTING CONTROL PANELS REMOVED DURING DEMOLITION. SEE E1.2, E5.1 AND E5.2.
3. PROVIDE NEW SHORE POWER PEDESTAL. SEE SCHEDULE ON E0.1, E4.1 POWER PEDESTAL DETAILS AND E5.2 ONE-LINE.
4. JUNCTION BOX FOR HEAT TRACE SERVING ALL SEASON WATER RISER. COORDINATE WITH LOCATION OF ALL SEASON WATER RISER PRIOR TO ROUGH-IN. SEE E5.2 ONE-LINE.
5. PROVIDE 120V 5W/FT SELF-REGULATING HEAT TRACE WITH POLYOLEFIN JACKET FROM ARCTIC HOSE BIB ON FLOATING DOCK DOWN TO 2" ABOVE WATERLINE (RAYCHEM 5XL-1-CR OR APPROVED EQUAL). PROVIDE POWER CONNECTION KIT, END SEAL AND ALL ACCESSORIES TO PROVIDE A COMPLETE OPERATING CIRCUIT. COORDINATE WITH LOCATION OF COLD WEATHER ARCTIC HOSE BIB PRIOR TO INSTALLATION.
6. SEE E5.2 FOR POWER PEDESTAL CONDUCTOR SIZE AND CIRCUIT BREAKER SIZE.
7. RECONNECT RETAINED CABLE TO RELOCATED FUEL FLOAT CONDUCTOR. SEE 2/E5.2.
8. SEE 2/E5.2 FOR SEWER PUMP OUT MOTOR CONDUCTOR SIZE AND CIRCUIT BREAKER SIZE.
9. SEE 2/E5.2 FOR CONDUCTOR SIZE.
10. RECONNECT EXISTING CONDUIT, CONDUCTORS AND WELDING RECEPTACLE TO PANEL 'S2'. SEE 2/E5.2.
11. PROVIDE, INSTALL AND CONNECT LED LIGHTING UPGRADE KIT (EATON MODEL NUMBER: 1L1037) TO EXISTING POWER PEDESTAL . WORK DONE UNDER ALTERNATE #1.
12. SEE 3/E4.3 CCTV SYSTEM DIAGRAM AND SCHEDULES. CONTRACTOR SHALL COORDINATE ALL CAMERA MOUNTING LOCATIONS AND INTENDED FIELD OF VIEW WITH OWNER'S REPRESENTATIVE PRIOR TO ROUGH-IN.
13. SEE E4.4 GANGWAY ELEVATIONS.
14. APPROXIMATE LOCATION OF BACKFLOW PREVENTER ENCLOSURE. SEE 1/C4.5.
15. PROVIDE 120V 5W/FT SELF REGULATING HEAT TRACE WITH POLYOLEFIN JACKET FROM BACKFLOW PREVENTER ENCLOSURE TO END OF ARCTIC PIPE. (RACHEM 5XL-1-CR OR APPROVED EQUAL). SEE 1/C5.0 FOR ROUTING HEAT TRACE THROUGH ARCTIC PIPE TO BACKFLOW PREVENTER ENCLOSURE. PROVIDE WITH POWER CONNECTION KIT, END SEAL AND ALL ACCESSORIES TO PROVIDE A COMPLETE OPERATING CIRCUIT. SEE 1/C4.5 BACKFLOW PREVENTER ASSEMBLY SECTION.
16. PROVIDE 120V, 20A, 1P GFCI WITH 30mA GROUND FAULT CIRCUIT PROTECTION IN NEXT AVAILABLE SPACE IN EXISTING PANEL 'N' AND CONNECT NEW HEAT TRACE CONDUIT AND CONDUCTORS. GFCI BREAKER SHALL ALSO INCLUDE HANDLE LOCK CAPABLE OF LOCKING BREAKER IN THE 'OFF' POSITION. FIELD VERIFY EXACT MAKE/MODEL OF PANEL PRIOR TO ORDERING BREAKER AND SHALL MEET THE AIC RATING OF THE PANELBOARD.
17. PROVIDE J-BOX FOR 1500W HEATER IN BACKFLOW PREVENTER ENCLOSURE. PROVIDE 120V, 20A, 1P CIRCUIT BREAKER IN NEXT AVAILABLE SPACE IN EXISTING PANEL 'N' AND CONNECT NEW HEATER CONDUIT AND CONDUCTORS. FIELD VERIFY EXACT MAKE/MODEL OF PANEL PRIOR TO ORDERING BREAKER AND SHALL MEET THE AIC RATING OF THE PANELBOARD. SEE 1/C4.5.

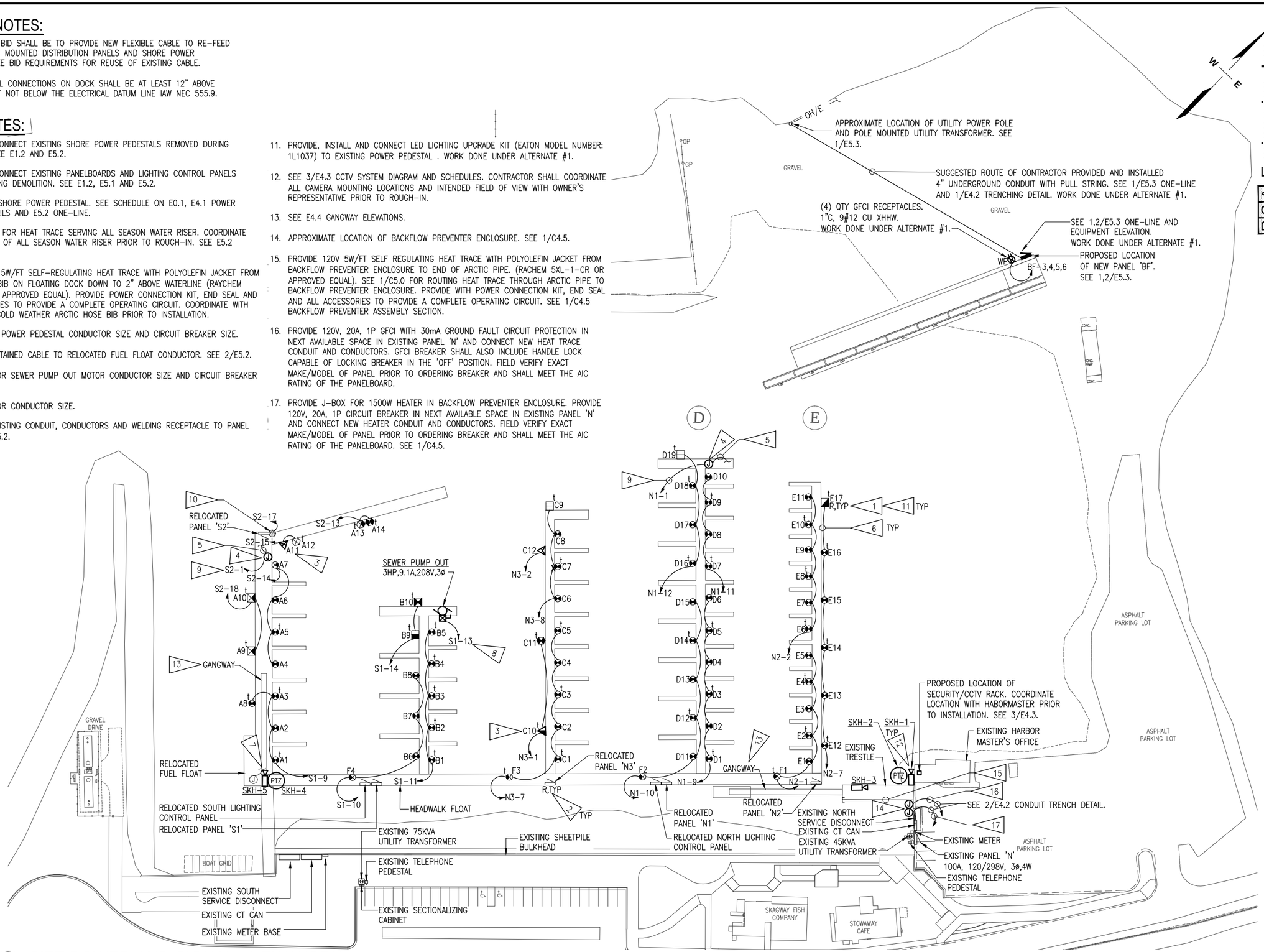

1 SITE POWER AND SIGNAL - NEW WORK
1" = 50'-0"

CONFORMED SET

RSA Engineering, Inc.
MECHANICAL AND ELECTRICAL CONSULTING ENGINEERS
2522 Arctic Boulevard, Suite 200
Anchorage, AK 99503 (907) 272-0021
191 Swanson Avenue, Suite 100
Wasilla, Alaska 99654 (907) 357-1021

URS
700 G STREET, SUITE 500
ANCHORAGE, AK 99501
TEL: (907)562-3366
FAX: (907)562-1297

STATE OF ALASKA — TIMOTHY E. HALL — EE-9131 — REGISTERED PROFESSIONAL ENGINEER

NO.	BY	DATE	REVISIONS	DESCRIPTION

MUNICIPALITY OF SKAGWAY

SKAGWAY SMALL BOAT HARBOR

SKAGWAY, AK

SITE POWER AND SIGNAL - NEW WORK

PROJECT No:	26220909
DATE:	8/14/2012
DESIGNED:	MJC
DRAWN BY:	MJC
CHECKED BY:	TEH
SHEET:	E3.1

SHEET NOTES:

1. COORDINATE WITH LOCAL UTILITY COMPANY FOR CORRECT TYPE OF METER SOCKETS FOR UTILITY PROVIDED METER.
2. METER (1) 60A, 120/208V, 3ø SHORE RECEPTACLE AND (1) 50A, 120/208V, 1ø SHORE RECEPTACLE.
3. METER TRANSIENT / POWER (1) 50A, 120/208V, 1ø SHORE RECEPTACLE TO SHORE METER. LABEL RECEPTACLE 'TRANSIENT / POWER RECEPTACLE'.

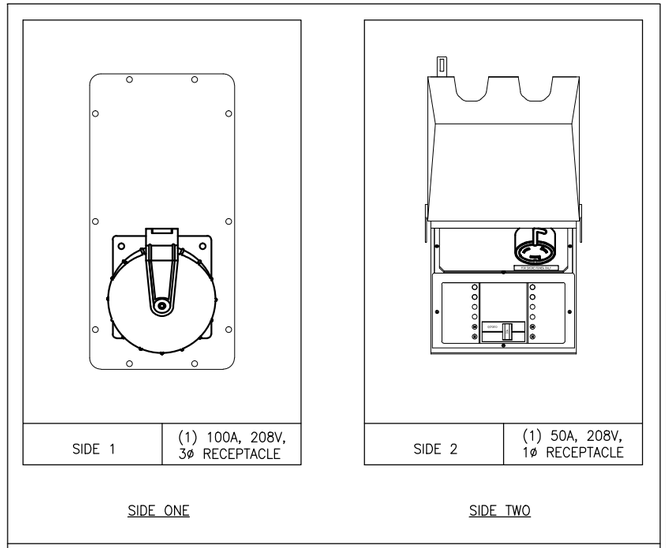

RECEPTACLE PLUG CONFIGURATIONS

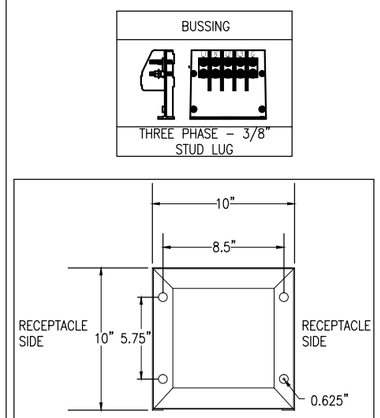

MOUNTING BASE AND DIMENSIONS

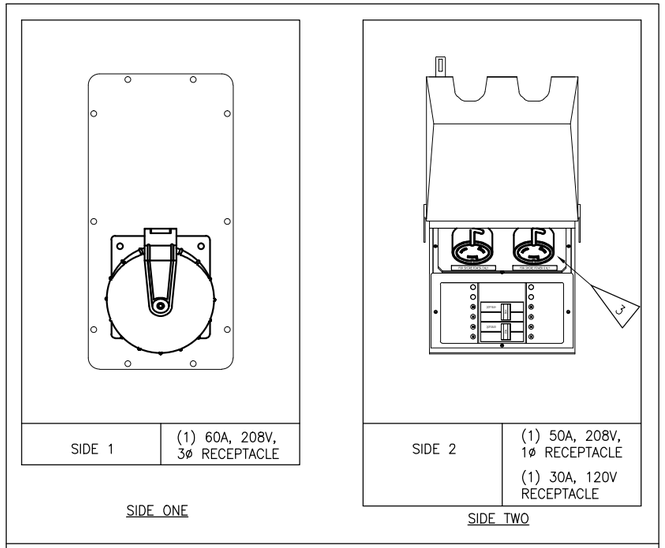

RECEPTACLE PLUG CONFIGURATIONS

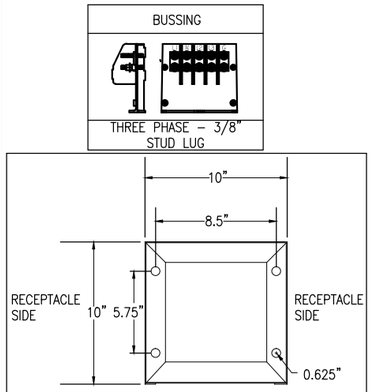

MOUNTING BASE AND DIMENSIONS

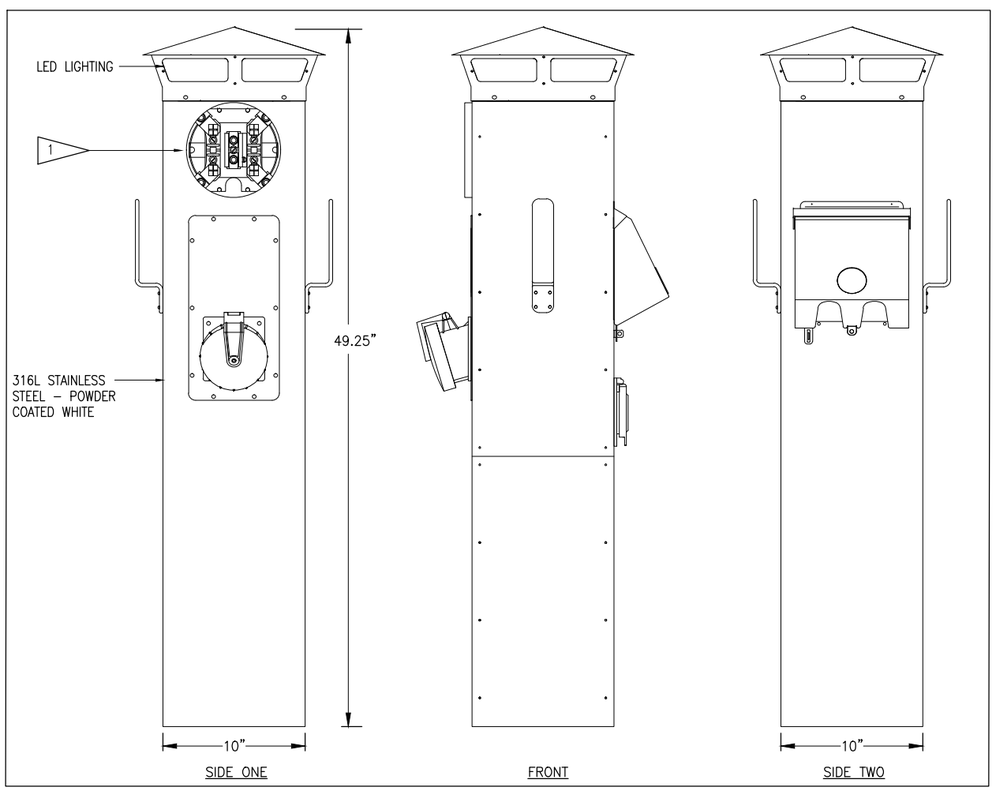

1 TYPICAL SHORE POWER PEDESTAL 'A' DETAIL
NTS

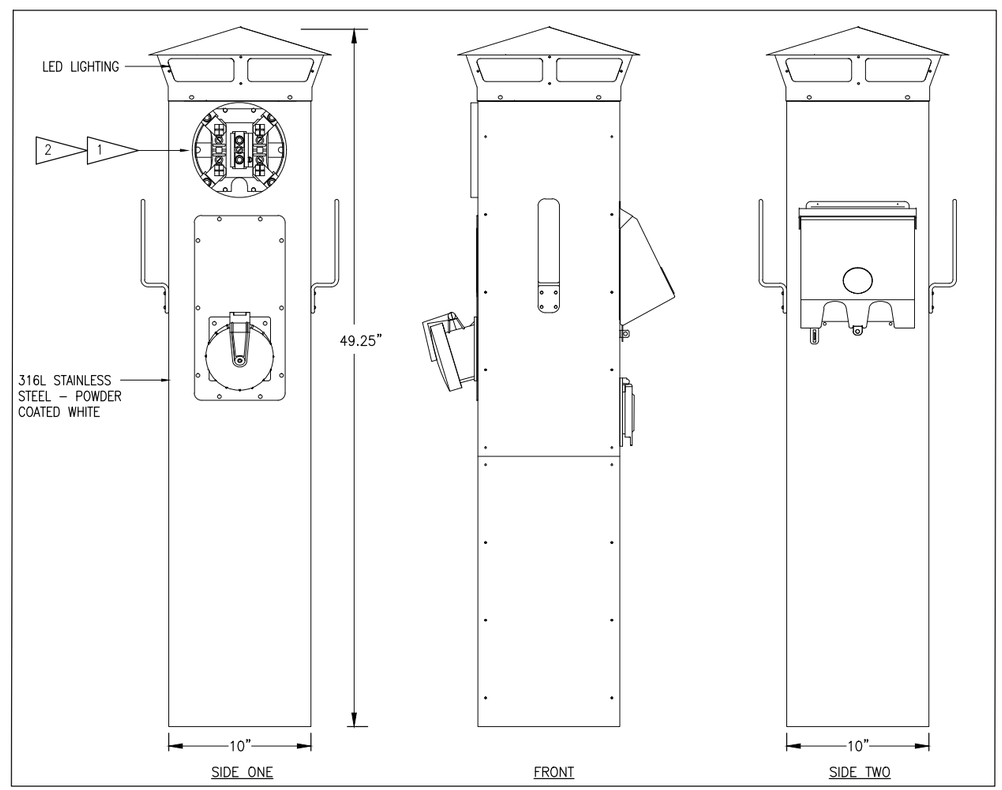

2 TYPICAL SHORE POWER PEDESTAL 'B' DETAIL
NTS

CONFORMED SET

RSA Engineering, Inc.
MECHANICAL AND ELECTRICAL CONSULTING ENGINEERS
2522 Arctic Boulevard, Suite 200
Anchorage, AK 99503 (907)272-0021
191 Swanson Avenue, Suite 100
Wasilla, Alaska 99654 (907)357-1021

URS
700 G STREET, SUITE 500
ANCHORAGE, AK 99501
TEL: (907)562-3366
FAX: (907)562-1297

STATE OF ALASKA
TIMOTHY E. HALL
EE-9131
REGISTERED PROFESSIONAL ENGINEER

REVISIONS

NO.	BY	DATE	DESCRIPTION

MUNICIPALITY OF SKAGWAY

SKAGWAY SMALL BOAT HARBOR
SKAGWAY, AK

TYPICAL SHORE POWER PEDESTAL 'A' & 'B' DETAIL

PROJECT No:	26220909
DATE:	8/14/2012
DESIGNED:	MJC
DRAWN BY:	MJC
CHECKED BY:	TEH
SHEET:	E4.1
PAGE:	55 OF 71

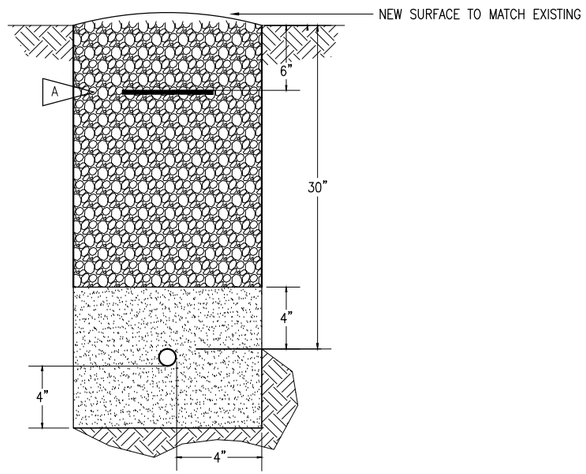

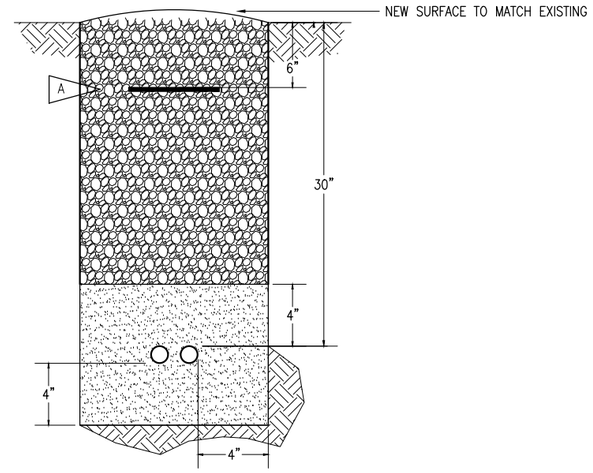

TRENCH DETAIL LEGEND

- SAND OR CLEAN FILL
- COMPACTED BACKFILL
- UNDISTURBED EARTH

TRENCH DETAIL NOTES:

A. PROVIDE 4 MIL, 6 INCH WIDE WARNING TAPE.

B. DEPTHS SPECIFIED ARE TO FINISHED GRADE.

C. OVER-EXCAVATE TRENCHES AS NECESSARY TO ALLOW FOR (a) SAND BEDDING OR (b) LOOSE SANDY SOILS OR (c) WHERE MORE THAN ONE CONDUIT WILL BE INSTALLED IN TRENCH AND LAYING FIRST CONDUIT MAY CAUSE TRENCH DAMAGE AND REDUCTION IN DEPTH.

1 TRENCH DETAIL

NOT TO SCALE

TRENCH DETAIL LEGEND

- SAND OR CLEAN FILL
- COMPACTED BACKFILL
- UNDISTURBED EARTH

TRENCH DETAIL NOTES:

A. PROVIDE 4 MIL, 6 INCH WIDE WARNING TAPE.

B. DEPTHS SPECIFIED ARE TO FINISHED GRADE.

C. OVER-EXCAVATE TRENCHES AS NECESSARY TO ALLOW FOR (a) SAND BEDDING OR (b) LOOSE SANDY SOILS OR (c) WHERE MORE THAN ONE CABLE WILL BE INSTALLED IN TRENCH AND LAYING FIRST CABLE MAY CAUSE TRENCH DAMAGE AND REDUCTION IN DEPTH.

2 TRENCH DETAIL

NOT TO SCALE

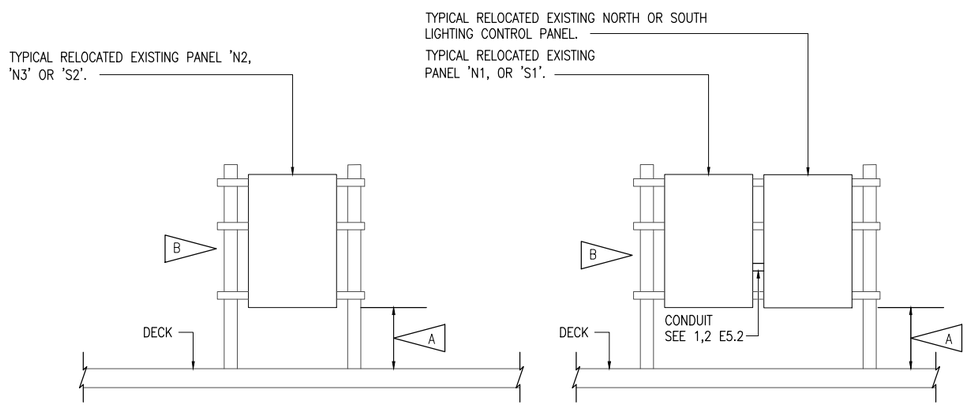

SERVICE GEAR DETAIL NOTES:

A. ELECTRICAL CONNECTIONS SHALL BE LOCATED AT LEAST 12 INCHES ABOVE THE DECK OF A FLOATING PIER PER NEC ARTICLE 555.9.

B. SEE DISTRIBUTION PANEL MOUNTING DETAIL ON STRUCTURAL 4/S3.13.

3 TYPICAL FLOATING DOCK SERVICE GEAR MOUNTING DETAIL

NOT TO SCALE

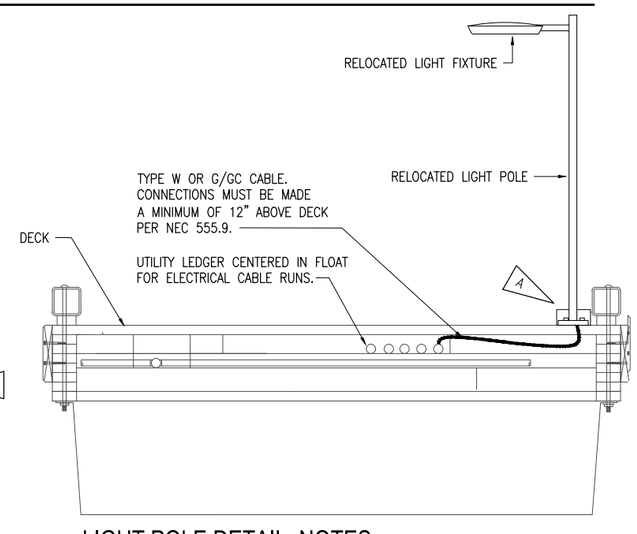

LIGHT POLE DETAIL NOTES:

A. SEE LIGHT POLE MOUNTING DETAIL ON STRUCTURAL 3/S3.13.

4 TYPICAL FLOATING DOCK LIGHT POLE MOUNTING DETAIL

NOT TO SCALE

CONFORMED SET

RSA Engineering, Inc.
MECHANICAL AND ELECTRICAL CONSULTING ENGINEERS
2522 Arctic Boulevard, Suite 200
Anchorage, AK 99503 (907) 272-0021
191 Swanson Avenue, Suite 100
Wasilla, Alaska 99654 (907) 357-1021

URS
700 G STREET, SUITE 500
ANCHORAGE, AK 99501
TEL: (907)562-3366
FAX: (907)562-1297

STATE OF ALASKA 49TH TIMOTHY E. HALL EE-9131 REGISTERED PROFESSIONAL ENGINEER

REVISIONS			
NO.	BY	DATE	DESCRIPTION

MUNICIPALITY OF SKAGWAY

SKAGWAY SMALL BOAT HARBOR

SKAGWAY, AK

DETAILS

PROJECT No:	26220909
DATE:	8/14/2012
DESIGNED:	MJC
DRAWN BY:	MJC
CHECKED BY:	TEH
SHEET:	E4.2
PAGE:	56 OF 71

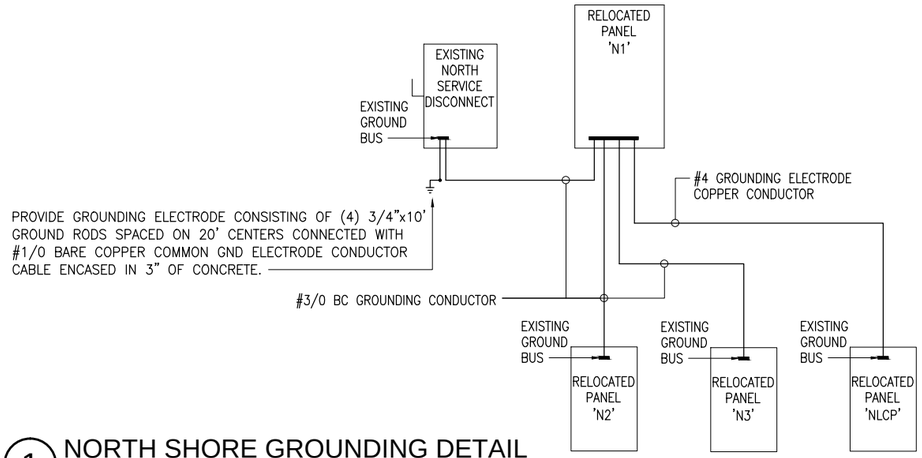

1 NORTH SHORE GROUNDING DETAIL
NOT TO SCALE

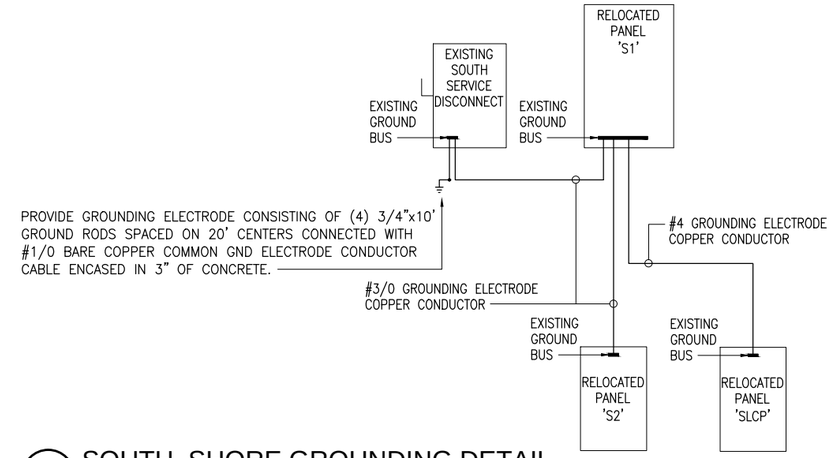

2 SOUTH SHORE GROUNDING DETAIL
NOT TO SCALE

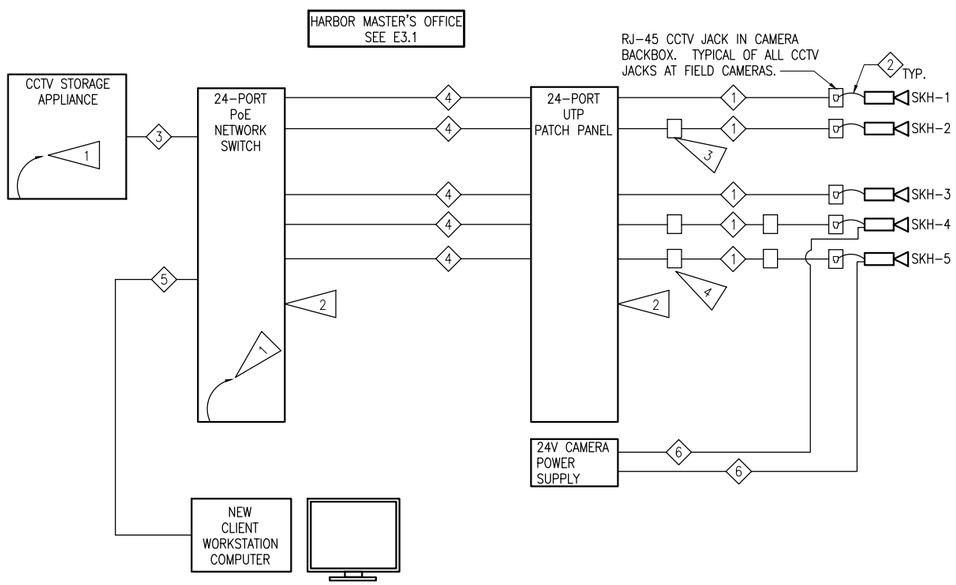

3 CCTV ONE-LINE DIAGRAM
NO SCALE

CCTV SYSTEM CAMERA SCHEDULE

SEE 1/E4.3 FOR ONE-LINE

CAMERA DESIGNATION	CAMERA LOCATION (SEE PLANS)	INTENDED COVERAGE AREA	CAMERA LENS FOCAL LENGTH	CAMERA TYPE (SEE SPECS)
SKH-1	SOUTHWEST CORNER OF HARBOR MASTER'S OFFICE. SEE 1/E3.1.	GENERAL COVERAGE OF HARBOR NEAR OFFICE	3.3-9.0 mm VARI-FOCAL	TYPE 'A' WALL, PENDANT
SKH-2	SOUTHWEST CORNER OF HARBOR MASTER'S OFFICE. SEE 1/E3.1.	270 DEGREE COVERAGE OF HARBOR FROM OFFICE	20x OPTICAL ZOOM	TYPE 'P' WALL, PENDANT
SKH-3	NORTH HARBOR TRESTLE. SEE 1/E3.1.	GENERAL COVERAGE OF HARBOR MASTER'S OFFICE	3.3-9.0 mm VARI-FOCAL	TYPE 'A' LIGHT POLE-MOUNTED
SKH-4	SOUTH HARBOR TRESTLE. SEE 1/E3.1.	270 DEGREE COVERAGE OF HARBOR FROM SOUTH TRESTLE	20x OPTICAL ZOOM	TYPE 'P' WALL, PENDANT
SKH-5	SOUTH HARBOR TRESTLE. SEE 1/E3.1.	GENERAL COVERAGE OF FAR END OF HARBOR	3.3-9.0 mm VARI-FOCAL	TYPE 'A' WALL, PENDANT

DETAIL NOTES:

1. PLUG EQUIPMENT INTO PLUG STRIP IN RACK. PROVIDE NEW DEDICATED 20A CIRCUIT FOR RACK IN NEAREST ELECTRICAL PANEL.
2. MOUNT EQUIPMENT IN NEW RACK. SEE 1/E3.1 FOR LOCATION.
3. MID-SPAN PoE INJECTOR PROVIDED WITH CAMERA.
4. PoE ETHERNET EXTENDER. INSTALL SO THAT NO CONTINUOUS LENGTH OF CAT 6 CABLE IS EQUAL TO MORE THAN 295 FT. TYPICAL OF (2) EACH FOR CAMERAS SKH-4 AND SKH-5.

CCTV SYSTEM CABLE SCHEDULE

CABLE NUMBER	DESCRIPTION
1	CAMERA PoE CABLE, CAT 6 UTP
2	CAMERA FIELD PATCH CORD, CAT 6 UTP, LENGTH AS REQUIRED.
3	GIGABIT ETHERNET UPLINK PATCH CORD, CAT 6 UTP
4	CROSS-CONNECT PATCH CORD, CAT 6 UTP
5	NEW NETWORK HORIZONTAL CABLE, CAT 6 UTP
6	2#12 AWG FOR CAMERA POWER

CONFORMED SET

RSA Engineering, Inc.
MECHANICAL AND ELECTRICAL CONSULTING ENGINEERS
2532 Arctic Boulevard, Suite 200
Anchorage, AK 99503 (907) 272-0021
191 Swanson Avenue, Suite 100
Wasilla, Alaska 99654 (907) 357-1021

URS
700 G STREET, SUITE 500
ANCHORAGE, AK 99501
TEL: (907)562-3366
FAX: (907)562-1297

STATE OF ALASKA 49TH TIMOTHY E. HALL EE-9131 REGISTERED PROFESSIONAL ENGINEER

REVISIONS

NO.	BY:	DATE	DESCRIPTION

MUNICIPALITY OF SKAGWAY

SKAGWAY SMALL BOAT HARBOR
SKAGWAY, AK

DETAILS AND CCTV SYSTEM DIAGRAM AND SCHEDULE

PROJECT No: 26220909
DATE: 8/14/2012
DESIGNED: MJC
DRAWN BY: MJC
CHECKED BY: TEH
SHEET: E4.3

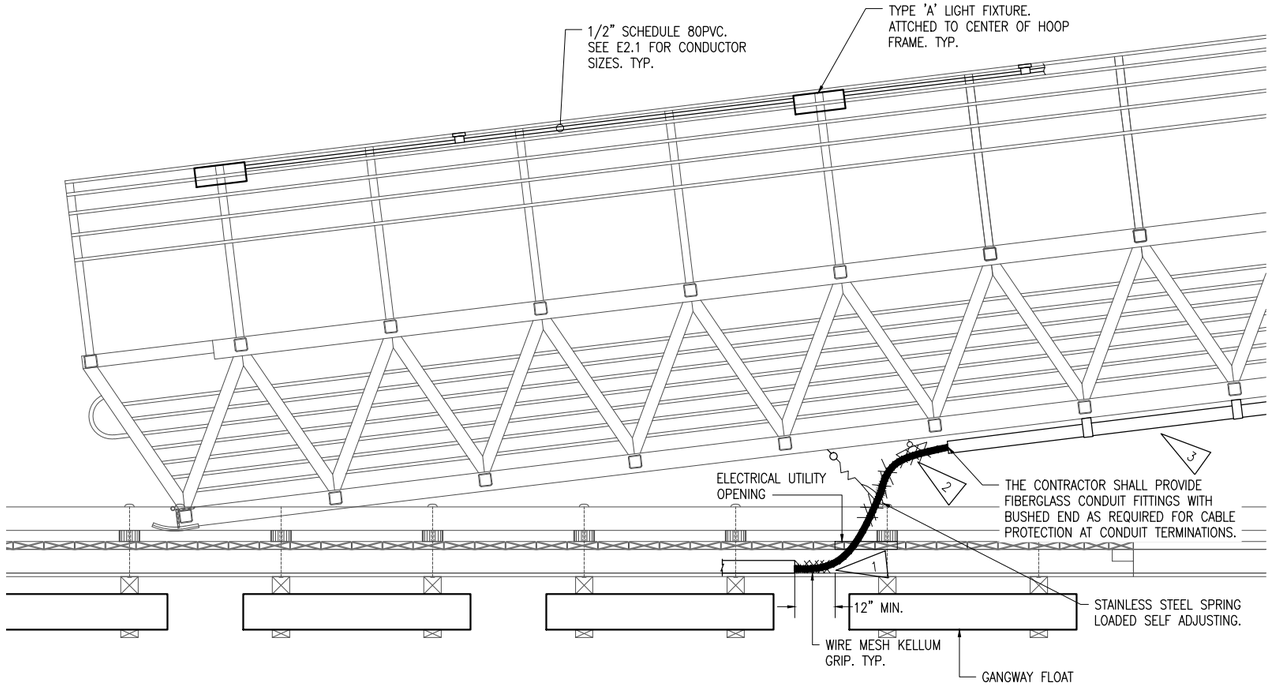

1 TYPICAL PARTIAL GANGWAY LANDING ELEVATION DETAIL
1/2" = 1'- 0"

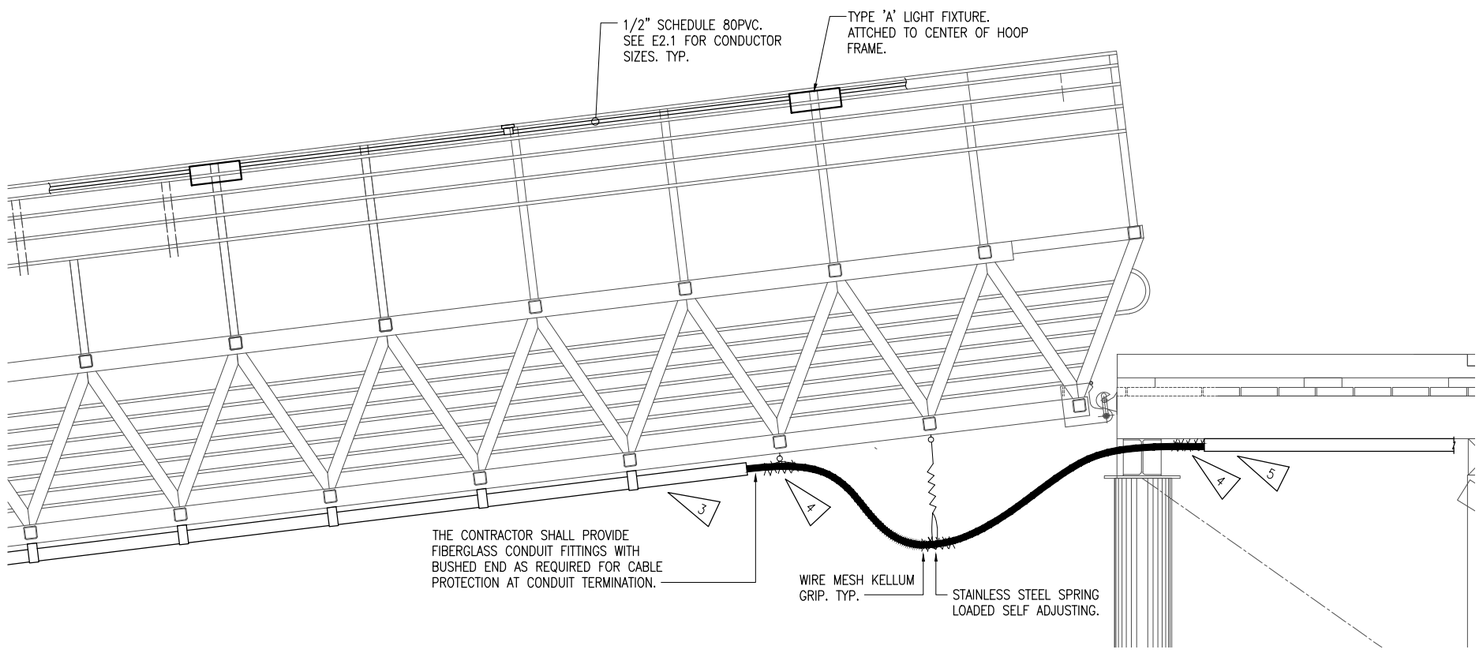

2 TYPICAL PARTIAL GANGWAY LANDING ELEVATION DETAIL
1/2" = 1'- 0"

SHEET NOTES:

1. PROVIDE STAINLESS STEEL TYPE KELLEM GRIP FOR EACH CABLE EXTENDING OFF THE END OF THE FLOAT.
2. PROVIDE 10'–0" ADDITIONAL SLACK TO EACH TYPE W, G/GC CABLE. SUPPORT CABLE WITH STAINLESS STEEL MESH–TYPE KELLEM GRIP ATTACHED TO STRUCTURAL MEMBERS ON BOTTOM OF GANGWAY.
3. PROVIDE NEW 4" I.D. FIBERGLASS DUCT TO SUPPORT CABLES ALONG UNDERSIDE OF GANGWAY. EACH OPEN END SHALL BE BUSHED TO ELIMINATE DAMAGE TO CABLE INSULATION. PROVIDE STANDARD FACTORY FINISH. SECURE DUCT TO UNDERSIDE OF GANGWAY STRUCTURAL MEMBERS EVERY 4'–0".
4. PROVIDE 10'–0" ADDITIONAL SLACK TO EACH TYPE W, G/GC CABLE. SECURE STAINLESS MESH TYPE KELLEM GRIPS IN EACH DIRECTION FOR EACH CABLE. ATTACH GRIPS TO CABLE AND UNDERSIDE STRUCTURAL MEMBERS.
5. PROVIDE NEW 4" I.D. FIBERGLASS DUCT, BUSHED ON EACH OPEN END AND SECURED TO BOTTOM OF APPROACH DOCK STRUCTURAL MEMBERS EVERY 5'–0".

CONFORMED SET

RSA Engineering, Inc.
MECHANICAL AND ELECTRICAL CONSULTING ENGINEERS
2522 Arctic Boulevard, Suite 200
Anchorage, AK 99503 (907) 272-0021
191 Swanson Avenue, Suite 100
Wasilla, Alaska 99654 (907) 357-1021

STATE OF ALASKA
TIMOTHY E. HALL
EE-9131
REGISTERED PROFESSIONAL ENGINEER

URS
700 G STREET, SUITE 500
ANCHORAGE, AK 99501
TEL: (907)562-3366
FAX: (907)562-1297

REVISIONS

NO.	BY	DATE	DESCRIPTION

MUNICIPALITY OF SKAGWAY

SKAGWAY SMALL BOAT HARBOR
SKAGWAY, AK

TYPICAL PARTIAL GANGWAY LANDING ELEVATION DETAIL

PROJECT No:	26220909
DATE:	8/14/2012
DESIGNED:	MJC
DRAWN BY:	MJC
CHECKED BY:	TEH
SHEET:	E4.4

DEMOLITION NOTES:

A. THE INFORMATION SHOWN ON THIS DRAWING IS TAKEN FROM AS-BUILT DRAWINGS, PHOTOS AND A NON-DESTRUCTIVE WALK THROUGH OF THE FACILITY. THERE IS NO WARRANTY OR GUARANTEE AS TO THE ACCURACY OF THE INFORMATION SHOWN HERE-IN. THE CONTRACTOR SHALL FIELD VERIFY ALL ITEMS SCHEDULED FOR DEMOLITION PRIOR TO START OF WORK.

B. THE OWNER SHALL HAVE FIRST RIGHT OF REFUSAL ON ALL SALVAGEABLE MATERIALS. THE CONTRACTOR SHALL DELIVER SALVAGED MATERIALS TO A WAREHOUSE AS DIRECTED BY THE OWNER. THE CONTRACTOR SHALL DISPOSE OF, OFF SITE, ALL UNWANTED MATERIALS.

C. DASHED OR DOTTED LINES INDICATE ITEMS TO BE REMOVED. SOLID LINES INDICATE EXISTING ITEMS TO REMAIN.

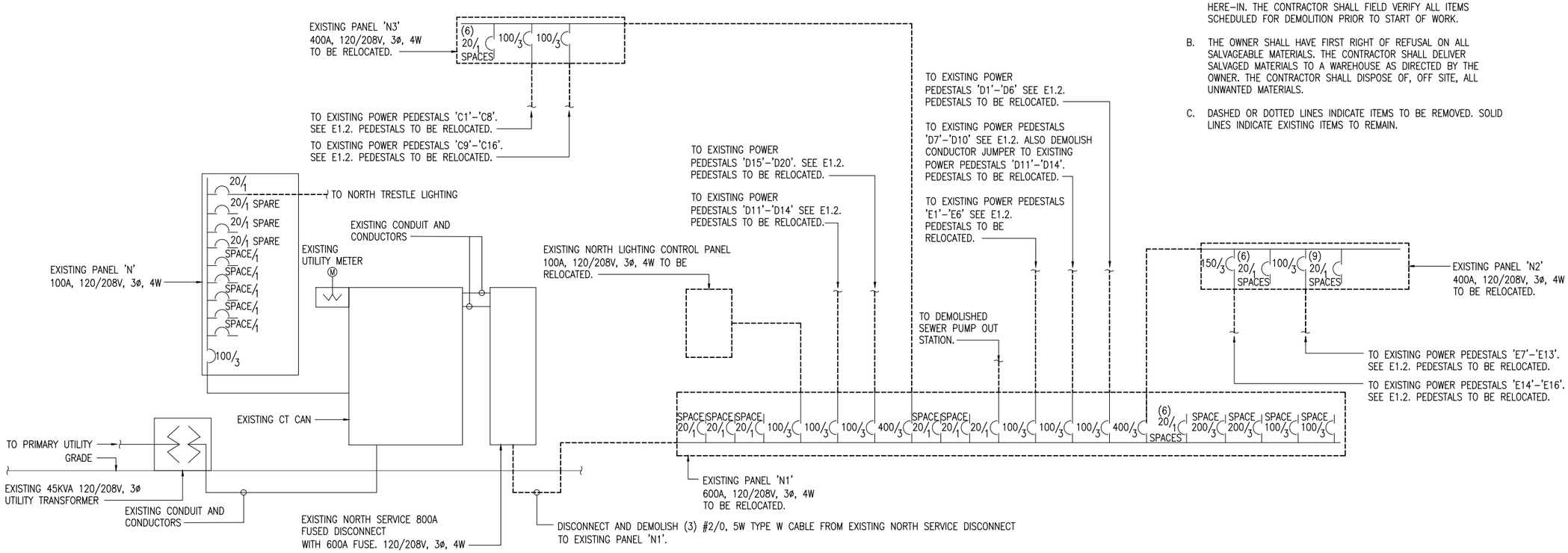

1 EXISTING NORTH HARBOR SERVICE ONE-LINE - DEMOLITION

NTS

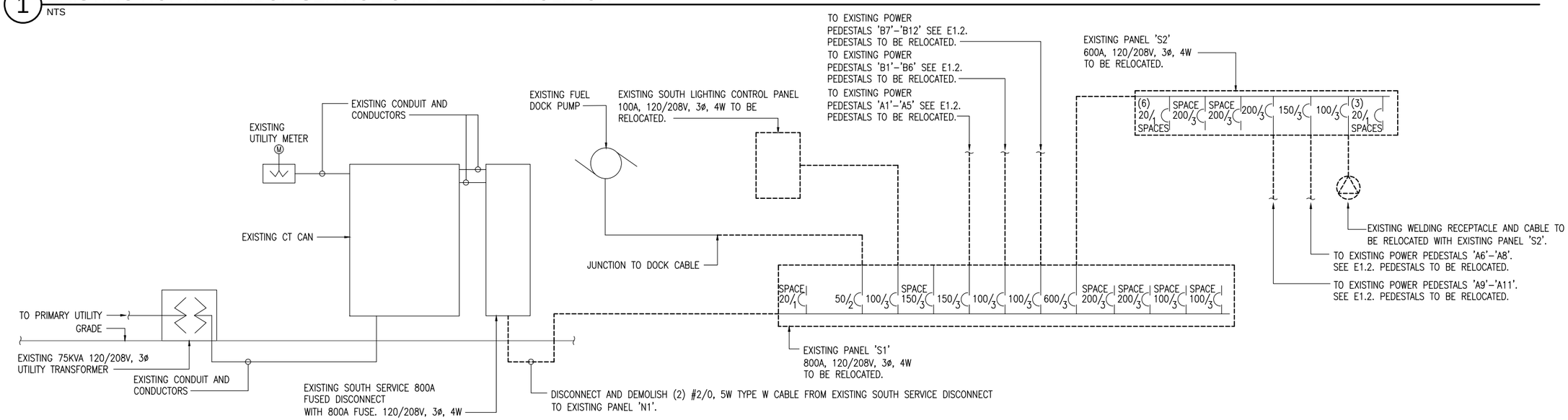

2 EXISTING SOUTH HARBOR SERVICE ONE-LINE - DEMOLITION

NTS

CONFORMED SET

RSA Engineering, Inc.
MECHANICAL AND ELECTRICAL CONSULTING ENGINEERS
2522 Arctic Boulevard, Suite 200
Anchorage, Alaska 99503 (907)562-4021
191 Swanson Avenue, Suite 103
Wasilla, Alaska 99654 (907)357-1021

STATE OF ALASKA
49TH
TIMOTHY E. HALL
EE-9131
REGISTERED PROFESSIONAL ENGINEER

URS
700 G STREET, SUITE 500
ANCHORAGE, AK 99501
TEL: (907)562-3366
FAX: (907)562-1297

REVISIONS

NO.	BY	DATE	DESCRIPTION

MUNICIPALITY OF SKAGWAY

SKAGWAY SMALL BOAT HARBOR

SKAGWAY, AK

HARBOR ONE - LINES - DEMOLITION

PROJECT No:	26220909
DATE:	8/14/2012
DESIGNED:	MJC
DRAWN BY:	MJC
CHECKED BY:	TEH
SHEET:	E5.1

GENERAL NOTES:

A. ALL ELECTRICAL CONNECTIONS ON DOCK SHALL BE AT LEAST 12" ABOVE THE DECK BUT NOT BELOW THE ELECTRICAL DATUM LINE IAW NEC 555.9.

SHEET NOTES:

1. PROVIDE GFCI WITH 30mA GROUND FAULT CIRCUIT PROTECTION. GFCI BREAKER SHALL ALSO INCLUDE HANDLE LOCK CAPABLE OF LOCKING THE BREAKER IN THE 'OFF' POSITION.
2. PROVIDE CIRCUIT BREAKER. PRIOR TO INSTALLATION, FIELD VERIFY EXACT MAKE/MODEL OF PANEL PRIOR TO ORDERING BREAKER. NEW CIRCUIT BREAKER SHALL MEET OR EXCEED THE AIC RATING OF THE PANELBOARD INSTALLED IN AND SHALL BE LISTED FOR USE IN THE PANEL.
3. PROVIDE GROUNDING PER DETAIL 1/E4.2.
4. PROVIDE GROUNDING PER DETAIL 2/E4.2.

FEEDER SCHEDULE (ALL CONDUCTORS SHALL BE COPPER)

1	(6) 4#2/0, W/GND. TYPE – W OR G/GC CABLE
2	(5) 4#2/0, W/GND. TYPE – W OR G/GC CABLE
3	NOT USED
4	(2) 4#2/0, W/GND. TYPE – W OR G/GC CABLE
5	NOT USED
6	(1) 4#2/0, W/GND. TYPE – W OR G/GC CABLE
7	(1) 4#1/0, W/GND. TYPE – W OR G/GC CABLE
8	(1) 4#2, W/GND. TYPE – W OR G/GC CABLE
9	(1) 3#10, W/GND. TYPE – W OR G/GC CABLE
10	(1) 3#6, W/GND. TYPE – W OR G/GC CABLE
11	(1) 2#10, W/GND. TYPE – W OR G/GC CABLE
12	(1) 1"C, 4#2, 1#2GND – XHHW

NOTE TO CONTRACTOR

PROVIDE SIGNAGE AND BENCHMARK TO INDICATE ELECTRICAL DATUM PLANE LEVEL ON SHORE, MEASURED 24 INCHES ABOVE THE HIGHEST HIGH TIDE LEVEL. CONTRACTOR SHALL SUBMIT BENCHMARK AND BENCHMARK LOCATION FOR ENGINEER APPROVAL. SEE CIVIL PLANS FOR TIDAL ELEVATION. IN THE EVENT SEA LEVEL REACHES THE ELECTRICAL DATUM PLANE DURING CONSTRUCTION, THE CONTRACTOR SHALL DISCONNECT ALL ELECTRICAL SERVICE TO ALL EQUIPMENT ON FLOATS AND PIERS PER NFPA 303–2000, ARTICLE 3.3.2.

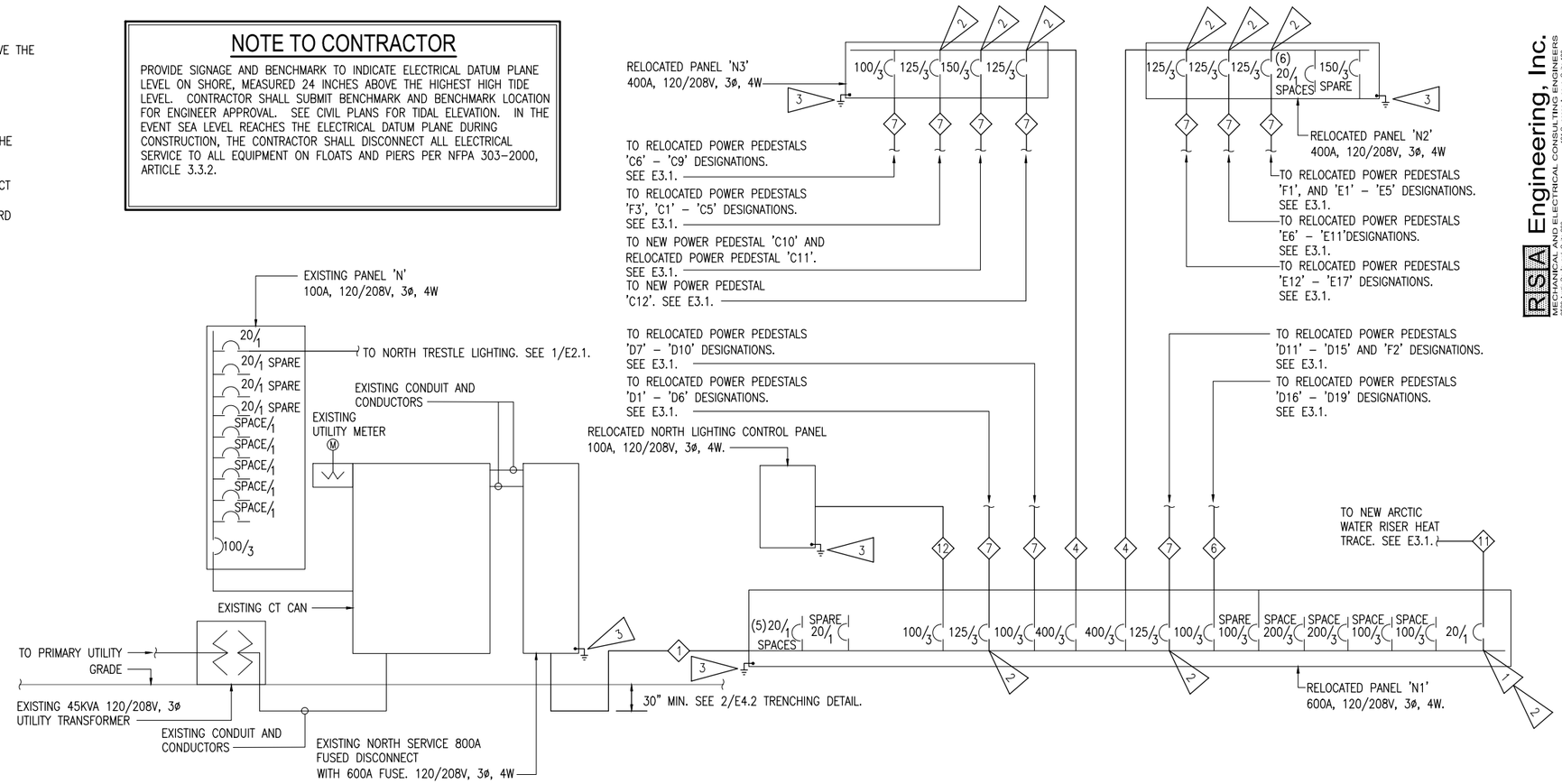

1 RELOCATED NORTH HARBOR SERVICE ONE-LINE - NEW WORK
NTS

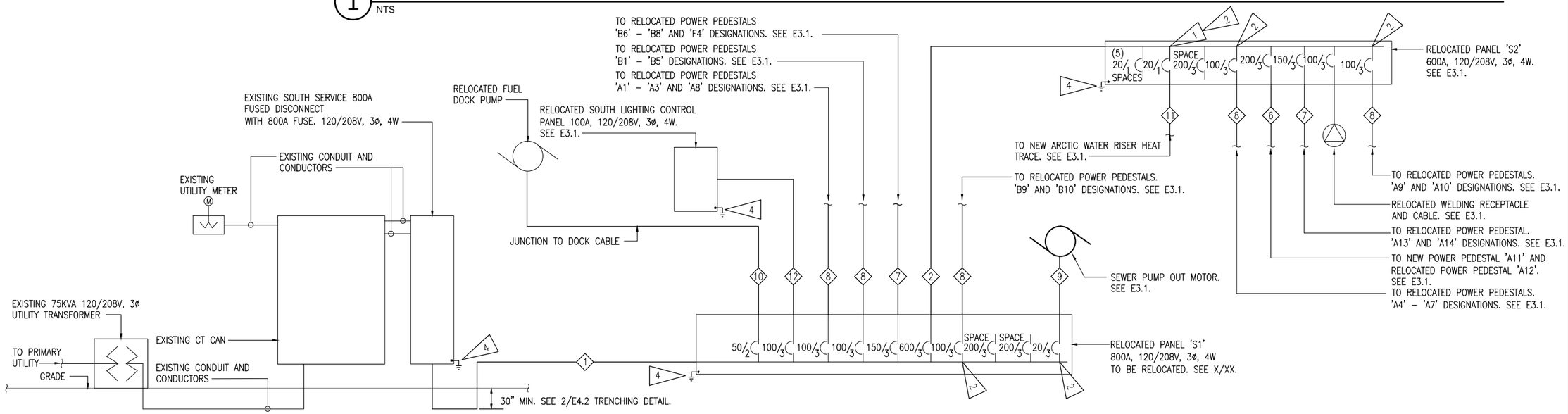

2 RELOCATED SOUTH HARBOR SERVICE ONE-LINE - NEW WORK
NTS

CONFORMED SET

RSA Engineering, Inc.
MECHANICAL AND ELECTRICAL CONSULTING ENGINEERS
2522 Arctic Boulevard, Suite 200
Anchorage, Alaska 99503 (907) 272-4021
191 Swanson Avenue, Suite 100
Wasilla, Alaska 99654 (907) 357-1021

URS
700 G STREET, SUITE 500
ANCHORAGE, AK 99501
TEL: (907)562-3366
FAX: (907)562-1297

STATE OF ALASKA 49TH TIMOTHY E. HALL EE-9131 PROFESSIONAL ENGINEER

REVISIONS

NO.	BY	DATE	DESCRIPTION

MUNICIPALITY OF SKAGWAY

SKAGWAY SMALL BOAT HARBOR
SKAGWAY, AK

RELOCATED HARBOR ONE - LINES - NEW WORK

PROJECT No:	26220909
DATE:	8/14/2012
DESIGNED:	MJC
DRAWN BY:	MJC
CHECKED BY:	TEH
SHEET:	E5.2
PAGE:	60 OF 71

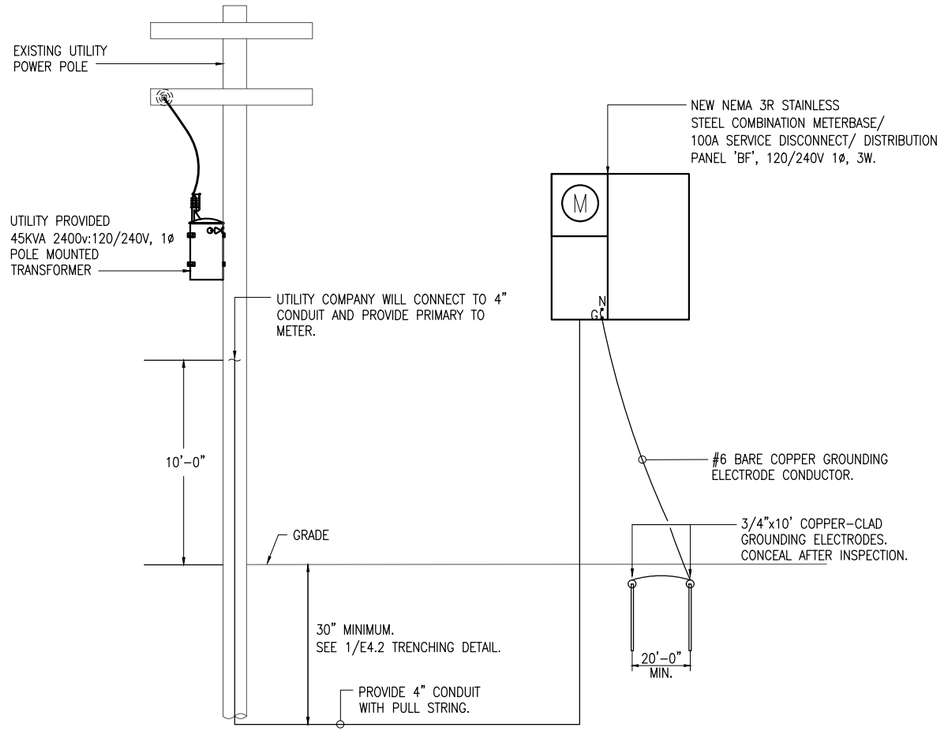

ONE-LINE GENERAL NOTES:

A. COORDINATE WITH LOCAL UTILITY COMPANY FOR ELECTRICAL SERVICE REQUIREMENTS PRIOR TO INSTALLATION.

B. SEE E3.1 AND PANEL 'BF' SCHEDULE.

1 BOARDING FLOAT ONE-LINE - ALTERNATE #1

NOT TO SCALE

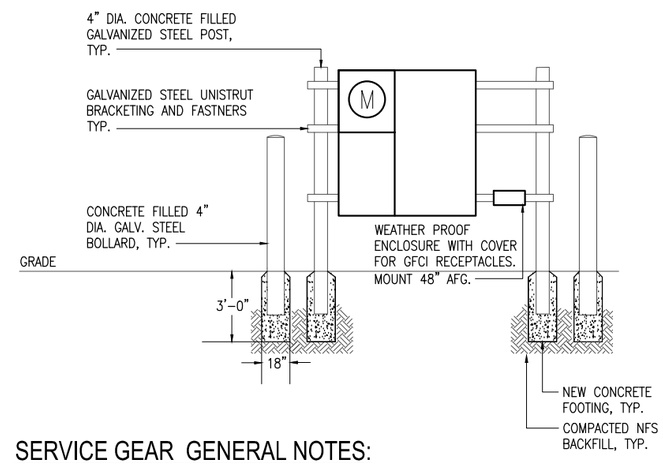

SERVICE GEAR GENERAL NOTES:

A. SEE E/3.1 FOR LOCATION OF SERVICE GEAR.

2 BOARDING FLOAT SERVICE GEAR MOUNTING DETAIL - ALTERNATE #1

NOT TO SCALE

CONFORMED SET

RSA Engineering, Inc.
MECHANICAL AND ELECTRICAL CONSULTING ENGINEERS
2522 Arctic Boulevard, Suite 200
Anchorage, Alaska 99503 (907)272-0021
191 Swanson Avenue, Suite 100
Wasilla, Alaska 99654 (907)357-1021

STATE OF ALASKA
TIMOTHY E. HALL
EE-9131
REGISTERED PROFESSIONAL ENGINEER

URS
700 G STREET, SUITE 500
ANCHORAGE, AK 99501
TEL: (907)562-3366
FAX: (907)562-1297

REVISIONS

NO.	BY	DATE	DESCRIPTION

MUNICIPALITY OF SKAGWAY

SKAGWAY SMALL BOAT HARBOR
SKAGWAY, AK

BOARDING FLOAT ONE - LINE AND SERVICE GEAR DETAIL - ALTERNATE #1

PROJECT No:	26220909
DATE:	8/14/2012
DESIGNED:	MJC
DRAWN BY:	MJC
CHECKED BY:	TEH
SHEET:	E5.3
PAGE:	61 OF 71

GENERAL NOTES:

1. PROVIDE PANEL UNDER ALTERNATE #1.

RELOCATED PANEL 'N1'

MFR/MODEL: SIEMENS TYPE P4 — VOLTS: 120/208V,3PH,4W — ENCLOSURE: NEMA 4X — 600 A

MTG: SURFACE

NOTE	CIRC	POLE	AMPS	SERVICE	TYPE	VOLT-AMPS A		VOLT-AMPS B		VOLT-AMPS C		TYPE	SERVICE	AMPS	POLE	CIRC	NOTE
a,c	1	1	*	WATER RISER HT TRACE	HEAT	100							SPACE	-	1	2	
	3	1	-	SPACE									SPACE	-	1	4	
	5	1	-	SPACE									SPARE	*	1	6	a
a	7	3	*	NORTH LIGHTING PANEL	LTG	980							SPARE	*	3	8	a
	7	3	*	^^^	LTG			560					^^^	*	3	8	
	7	3	*	^^^	LTG					630			^^^	*	3	8	
a	9	3	*	PED LOC D1 - D6	SPEC	18000	15600					SPEC	PED LOC F2, D11 - D15	*	3	10	a
	9	3	*	^^^	SPEC			14400	15600			SPEC	^^^	*	3	10	
	9	3	*	^^^	SPEC					14400	15600	SPEC	^^^	*	3	10	
a	11	3	*	PED LOC D7 - D10	SPEC	12000	11147					SPEC	PED LOC D16 - D19	*	3	12	a
	11	3	*	^^^	SPEC			12000	11147			SPEC	^^^	*	3	12	
	11	3	*	^^^	SPEC					12000	11147	SPEC	^^^	*	3	12	
a	13	3	*	RELOCATED PANEL 'N3'	SPEC	56747	49200					SPEC	RELOCATED PANEL 'N2'	*	3	14	a
	13	3	*	^^^	SPEC			56747	49200			SPEC	^^^	*	3	14	
	13	3	*	^^^	SPEC					56747	49200	SPEC	^^^	*	3	14	
	15	3	-	200A SPACE									200A SPACE	-	3	16	
	15	3	-	^^^									^^^	-	3	16	
	15	3	-	^^^									^^^	-	3	16	
	17	3	-	100A SPACE									100A SPACE	-	3	18	
	17	3	-	^^^									^^^	-	3	18	
	17	3	-	^^^									^^^	-	3	18	
				TOTAL V-A			163774		159654		159724		483,152	VA			
				TOTAL AMPS			1,365		1,330		1,331		1,341	A			

	LTG	REC	MOTR	LG MTR	MISC	KIT	HEAT	SPEC	TOTAL	AMPS	
CONNECTED LOAD IN KVA (N1)	2.17	0.00	0.00	0.00	0.00	0.00	0.10	480.88	483.2 KVA	1341	A
CONNECTED LOAD IN KVA (PANELS NLCP, N2 & N3)	0.00	0.00	0.00	0.00	0.00	0.00	0.00	0.00	0.0 KVA	0	A
TOTAL CONNECTED LOAD IN KVA:	2.17	0.00	0.00	0.00	0.00	0.00	0.10	480.88	483.2 KVA	1341	A
DEMAND LOAD IN KVA:	2.71	0.00	0.00	0.00	0.00	0.00	0.13	129.84	132.7 KVA	368	A

PANEL NOTES:
a SEE 2/E5.1 FOR CIRCUIT BREAKER SIZE.
b AMPERAGE BASED ON 80% PEDESTAL RECEPTACLE DEMAND FACTOR AND 90% PEDESTAL METER DEMAND FACTOR. 2008 NEC TABLE 555.12.
c USE GFCI WITH 30mA GROUND FAULT CIRCUIT PROTECTION. GFCI BREAKER SHALL ALSO INCLUDE HANDLE LOCK CAPABLE OF LOCKING THE BREAKER IN THE 'OFF' POSITION.

PANEL OPTIONS:
MAIN LUGS ONLY

RELOCATED PANEL 'N2'

MFR/MODEL: SIEMENS TYPE P1 — VOLTS: 120/208V,3PH,4W — ENCLOSURE: NEMA 4X — 400 A

MTG: SURFACE

NOTE	CIRC	POLE	AMPS	SERVICE	TYPE	VOLT-AMPS A		VOLT-AMPS B		VOLT-AMPS C		TYPE	SERVICE	AMPS	POLE	CIRC	NOTE
a	1	3	*	PED LOC F1,E1 - E5	SPEC	16800	14400					SPEC	PED LOC E6 - E11	*	3	2	a
a	3	3	*	^^^	SPEC			16800	14400			SPEC	^^^	*	3	4	a
a	5	3	*	^^^	SPEC					16800	14400	SPEC	^^^	*	3	6	a
a	7	3	*	PED LOC E12 - E17	SPEC	18000							SPACE	-	1	8	
a	9	3	*	^^^	SPEC			18000					SPACE	-	1	10	
a	11	3	*	^^^	SPEC					18000			SPACE	-	1	12	
	13	3	*	SPARE									SPACE	-	1	14	
	15	3	*	^^^									SPACE	-	1	16	
	17	3	*	^^^									SPACE	-	1	18	
				TOTAL V-A			49200		49200		49200		147,600	VA			
				TOTAL AMPS			410		410		410		410	A			

	LTG	REC	MOTR	LG MTR	MISC	KIT	HEAT	SPEC	TOTAL	AMPS	
CONNECTED LOAD IN KVA (N2)	0.00	0.00	0.00	0.00	0.00	0.00	0.00	147.60	147.6 KVA	410	A
DEMAND LOAD IN KVA:	0.00	0.00	0.00	0.00	0.00	0.00	0.00	59.78	59.8 KVA	166	A

PANEL NOTES:
a SEE 2/E5.1 FOR CIRCUIT BREAKER SIZE
b AMPERAGE BASED ON 70% PEDESTAL RECEPTACLE DEMAND FACTOR AND 90% PEDESTAL METER DEMAND FACTOR. 2008 NEC 555.12.
c

PANEL OPTIONS:
MAIN LUGS ONLY

RELOCATED PANEL 'N3'

MFR/MODEL: SIEMENS TYPE P2 — VOLTS: 120/208V,3PH,4W — ENCLOSURE: NEMA 4X — 400 A

MTG: SURFACE

NOTE	CIRC	POLE	AMPS	SERVICE	TYPE	VOLT-AMPS A		VOLT-AMPS B		VOLT-AMPS C		TYPE	SERVICE	AMPS	POLE	CIRC	NOTE
a	1	3	*	PED LOC C10 AND C11	SPEC	16800	12000					SPEC	PED LOC C12	*	3	2	a
	3	3	*	^^^	SPEC			16800	12000			SPEC	^^^	*	3	4	
	5	3	*	^^^	SPEC					16800	12000	SPEC	^^^	*	3	6	
a	7	3	*	PED LOC F3,C1-C5	SPEC	16800	11147					SPEC	PED LOC C6-C9	*	3	8	a
	9	3	*	^^^	SPEC			16800	11147			SPEC	^^^	*	3	10	
	11	3	*	^^^	SPEC					16800	11147	SPEC	^^^	*	3	12	
				TOTAL V-A			56747		56747		56747		170,241	VA			
				TOTAL AMPS			473		473		473		473	A			

AVAILABLE FAULT CURRENT: A — AIC RATING:

	LTG	REC	MOTR	LG MTR	MISC	KIT	HEAT	SPEC	TOTAL	AMPS	
CONNECTED LOAD IN KVA (N3)	0.00	0.00	0.00	0.00	0.00	0.00	0.00	170.24	170.2 KVA	473	A
DEMAND LOAD IN KVA:	0.00	0.00	0.00	0.00	0.00	0.00	0.00	107.25	107.3 KVA	298	A

PANEL NOTES:
a SEE 2/E5.1 FOR CIRCUIT BREAKER SIZE.
b AMPERAGE BASED ON 80% PEDESTAL RECEPTACLE DEMAND FACTOR AND 90% PEDESTAL METER DEMAND FACTOR. 2008 NEC 555.12.

PANEL OPTIONS:
MAIN LUGS ONLY

RELOCATED NORTH LIGHTING CONTROL PANEL 'NLCP'

MFR/MODEL: SKYLINE — VOLTS: 120/208V,3PH,4W — ENCLOSURE: NEMA 4X — 100 A

MTG: SURFACE

NOTE	CIRC	POLE	AMPS	SERVICE	TYPE	VOLT-AMPS A		VOLT-AMPS B		VOLT-AMPS C		TYPE	SERVICE	AMPS	POLE	CIRC	NOTE
	1	1	20	GANGWAY LIGHTS	LTG	350							SPACE	-	1	2	
	3	1	20	LIGHT LOC E1 - E8	LTG			560					SPACE	-	1	4	
	5	1	20	LIGHT LOC D1 - D9	LTG					630			SPACE	-	1	6	
	7	1	20	LIGHT LOC C1 - C9	LTG	630							SPACE	-	1	8	
	9	1	-	SPACE									SPACE	-	1	10	
	11	1	-	SPACE									SPACE	-	1	12	
				TOTAL V-A			980		560		630		2,170	VA			
				TOTAL AMPS			8		5		5		6	A			

	LTG	REC	MOTR	LG MTR	MISC	KIT	HEAT	SPEC	TOTAL	AMPS	
CONNECTED LOAD IN KVA (NLCP)	2.17	0.00	0.00	0.00	0.00	0.00	0.00	0.00	2.2 KVA	6	A
TOTAL CONNECTED LOAD IN KVA:	2.17	0.00	0.00	0.00	0.00	0.00	0.00	0.00	2.2 KVA	6	A
DEMAND LOAD IN KVA:	2.71	0.00	0.00	0.00	0.00	0.00	0.00	0.00	2.7 KVA	8	A

PANEL NOTES:
a
b
c
d
e

PANEL OPTIONS:
MAIN LUGS ONLY

1

NEW DISTRIBUTION PANEL 'BF'

MFR/MODEL: — VOLTS: 120/240V,1PH,3W — ENCLOSURE: NEMA 3R STAINLESS STEEL — 100 A

TYPE: PANELBOARD — MTG: RECESSED

NOTE	CIRC	POLE	AMPS	SERVICE	TYPE	VOLT-AMPS A		VOLT-AMPS B		TYPE	SERVICE	AMPS	POLE	CIRC	NOTE
	1	1	20	BOARDING FLOAT LGHTS	LTG	380					SPACE	-	1	2	
a	3	1	20	DOCK GFCI RECP	RECP			180	180		DOCK GFCI RECP	20	1	4	a
a	5	1	20	DOCK GFCI RECP	RECP	180					SPACE	-	1	6	
	7	1	-	SPACE					180		DOCK GFCI RECP	20	1	8	a
	9	1	-	SPACE							SPACE	-	1	10	
	11	1	-	SPACE							SPACE	-	1	12	
				TOTAL V-A		560		540			1,100	VA			
				TOTAL AMPS		5		5			5	A			

A.I.C. RATING: 10,000

	LTG	RECP	MOTR	LG MT	MISC	SPEC	TOTAL	AMPS	
CONNECTED LOAD IN KVA (THIS PANEL):	0.38	0.36	0.00	0.00	0.00	0.00	0.7 KVA	3	A
CONNECTED LOAD IN KVA (BRANCH PANELS):							0.0 KVA	0	A
TOTAL CONNECTED LOAD IN KVA:	0.38	0.36	0.00	0.00	0.00	0.00	0.7 KVA	3	A
DEMAND LOAD IN KVA:	0.48	0.36	0.00	0.00	0.00	0.00	0.8 KVA	3	A

PANEL NOTES:
a GFCI RECEPTACLES ARE NOT FOR SHORE POWER AND MUST BE CLEARLY MARKED TO INDICATE THAT THEY ARE NOT TO BE USED TO SUPPLY POWER TO BOATS PER NEC 555.19-B(1,2).
b
c

PANEL OPTIONS:
MAIN LUGS ONLY

CONFORMED SET

RSA Engineering, Inc.
MECHANICAL AND ELECTRICAL CONSULTING ENGINEERS
2532 Arctic Boulevard, Suite 200
Anchorage, AK 99503 (907)562-0221
191 Swanson Avenue, Suite 100
Wasilla, Alaska 99654 (907)357-1021

STATE OF ALASKA — 49TH — TIMOTHY E. HALL — EE-9131 — REGISTERED PROFESSIONAL ENGINEER

URS
700 G STREET, SUITE 500
ANCHORAGE, AK 99501
TEL: (907)562-3366
FAX: (907)562-1297

REVISIONS

NO.	BY	DATE	DESCRIPTION

MUNICIPALITY OF SKAGWAY

SKAGWAY SMALL BOAT HARBOR
SKAGWAY, AK
PANEL SCHEDULES

PROJECT No:	26220909
DATE:	8/14/2012
DESIGNED:	MJC
DRAWN BY:	MJC
CHECKED BY:	TEH
SHEET:	E6.1

RELOCATED PANEL 'S1'

MFR/MODEL: SIEMENS TYPE P4 VOLTS: 120/208V,3PH,4W ENCLOSURE: NEMA 4X 800 A

MTG: SURFACE

NOTE	CIRC	POLE	AMPS	SERVICE	TYPE	VOLT-AMPS A	VOLT-AMPS B	VOLT-AMPS C	TYPE	SERVICE	AMPS	POLE	CIRC	NOTE
	1	1	-	SPACE						SPACE	-	3	2	
a	3	2	*	FUEL FLOAT	MOTR		4160			^^^	-	3	4	
	5	2	*	^^	MOTR			4160		^^^	-	3	6	
a	7	3	*	RELOCATED SOUTH LGT PNL	FEDR	770				SPACE	-	3	8	
	7	3	*	^^^	FEDR		560			^^^	-	3	8	
	7	3	*	^^^	FEDR			350		^^^	-	3	8	
a,c	9	3	*	PED LOC A1 - A3 AND A8	RECP	9600 8400			RECP	PED LOC B6 - B8 AND F4	*	3	10	a,c
	9	3	*	^^^	RECP		9600 8400		RECP	^^^	*	3	10	
	9	3	*	^^^	RECP			9600 8400	RECP	^^^	*	3	10	
a,b	11	3	*	PED LOC B1 - B5	RECP	12000 76980			FEDR	RELOCATED PANEL 'S2'	*	3	12	a,c
	11	3	*	^^^	RECP		12000 76880		FEDR	^^^	*	3	12	
	11	3	*	^^^	RECP			12000 76880	FEDR	^^^	*	3	12	
a	13	3	*	SEWER PUMP OUT	MOTR	1093 9333			RECP	PED LOC B9 AND B10	*	3	14	a,d
	13	3	*	^^^	MOTR		1093 9333		RECP	^^^	*	3	14	
	13	3	*	^^^	MOTR			1093 9333	RECP	^^^	*	3	14	
				TOTAL V-A		118176	122026	121816		362,018 VA				
				TOTAL AMPS		985	1,017	1,015		1,005 A				

	LTG	REC	MOTR	LG MTR	MISC	KIT	HEAT	SPEC	TOTAL	AMPS
CONNECTED LOAD IN KVA (MDP)	0.00	118.00	11.60	2.08	0.00	0.00	0.00	0.00	129.6 KVA	360 A
CONNECTED LOAD IN KVA (BRANCH PANEL SLCP & S2)	2.10	207.60	0.00	0.00	0.00	0.00	0.10	23.04	232.8 KVA	646 A
TOTAL CONNECTED LOAD IN KVA:	2.10	325.60	11.60	2.08	0.00	0.00	0.10	23.04	362.4 KVA	1006 A
DEMAND LOAD IN KVA:	2.63	244.33	11.60	2.08	0.00	0.00	0.10	23.04	283.8 KVA	788 A

PANEL NOTES:
a SEE 2/E5.1 FOR CIRCUIT BREAKER SIZE.
b AMPERAGE BASED ON 80% PEDESTAL RECEPTACLE DEMAND FACTOR AND 90% PEDESTAL METE DEMAND FACTOR. 2008 NEC TABLE 555.12.
c AMPERAGE BASED ON 90% PEDESTAL RECEPTACLE DEMAND FACTOR AND 90% METER DEMAND FACTOR. 2008 NEC TABLE 555.12.
d AMPERAGE BASED ON 90% METER DEMAND FACTOR 2008 NEC TABLE 555.12.

PANEL OPTIONS:
MAIN LUGS ONLY

RELOCATED PANEL 'S2'

MFR/MODEL: SIEMENS TYPE P2 VOLTS: 120/208V,3PH,4W ENCLOSURE: NEMA 4X 600 A

MTG: SURFACE

NOTE	CIRC	POLE	AMPS	SERVICE	TYPE	VOLT-AMPS A	VOLT-AMPS B	VOLT-AMPS C	TYPE	SERVICE	AMPS	POLE	CIRC	NOTE
a,c	1	1	*	WATER RISER HT TRACE	HEAT	100				SPACE	-	1	2	
	3	1	-	SPACE						SPACE	-	1	4	
	5	1	-	SPACE						SPACE	-	1	6	
	7	3	-	SPACE						SPACE	-	3	8	
	7	3		^^^						^^^		3	8	
	7	3		^^^						^^^		3	8	
	9	3	-	SPACE						SPACE	-	3	10	
	9	3		^^^						^^^		3	10	
	9	3		^^^						^^^		3	10	
	11	3	-	SPACE						SPACE	-	3	12	
	11	3		^^^						^^^		3	12	
	11	3		^^^						^^^		3	12	
a,b	13	3	*	PED LOC A13 AND A14	RECP	21600 8400			RECP	PED LOC A4-A7	*	3	14	a,b
	13	3	*	^^^	RECP		21600 8400		RECP	^^^	*	3	14	
	13	3	*	^^^	RECP			21600 8400	RECP	^^^	*	3	14	
a,b	15	3	*	PED LOC A11 AND A12	RECP	28800					-		16	
	15	3	*	^^^	RECP		28800			SPACE	-	1	16	
	15	3	*	^^^	RECP			28800			-		16	
a	17	3	*	WELDING RECEPTACLE	SPEC	7680 10400			RECP	PED LOC A9 AND A10	*	3	18	a,b
	17	3	*	^^^	SPEC		7680 10400		RECP	^^^	*	3	18	
	17	3	*	^^^	SPEC			7680 10400	RECP	^^^	*	3	18	
				TOTAL V-A		76980	76880	76880		230,740 VA				
				TOTAL AMPS		642	641	641		640 A				

AVAILABLE FAULT CURRENT: A AIC RATING:

	LTG	REC	MOTR	LG MTR	MISC	KIT	HEAT	SPEC	TOTAL	AMPS
CONNECTED LOAD IN KVA (S2)	0.00	207.60	0.00	0.00	0.00	0.00	0.10	23.04	230.7 KVA	640 A
DEMAND LOAD IN KVA:	0.00	129.85	0.00	0.00	0.00	0.00	0.10	23.04	153.0 KVA	425 A

PANEL NOTES:
a SEE 2/E5.1 FOR CIRCUIT BREAKER SIZE.
b AMPERAGE BASED ON 90% PEDESTAL METER DEMAND FACTOR. 2008 NEC TABLE 555.12.
c USE GFCI WITH 30mA GROUND FAULT CIRCUIT PROTECTION. GFCI BREAKER SHALL ALSO INCLUDE HANDLE LOCK CAPABLE OF LOCKING THE BREAKER IN THE 'OFF' POSITION.
d

PANEL OPTIONS:
MAIN LUGS ONLY

RELOCATED SOUTH LIGHTING CONTROL PANEL 'SLCP'

MFR/MODEL: SKYLINE VOLTS: 120/208V,3PH,4W ENCLOSURE: NEMA 4X 100 A

MTG: SURFACE

NOTE	CIRC	POLE	AMPS	SERVICE	TYPE	VOLT-AMPS A	VOLT-AMPS B	VOLT-AMPS C	TYPE	SERVICE	AMPS	POLE	CIRC	NOTE
	1	1	20	LIGHT LOC A1 - A11	LTG	770				SPACE	-	1	2	
	3	1	20	LIGHT LOC B1 - B8	LTG		560			SPACE	-	1	4	
	5	1	20	GANGWAY LIGHTS	LTG			350		SPACE	-	1	6	
	7	1	20	SPARE						SPACE	-	1	8	
	9	1	-	SPACE						SPACE	-	1	10	
	11	1	-	SPACE						SPACE	-	1	12	
				TOTAL V-A		770	560	350		1,680 VA				
				TOTAL AMPS		6	5	3		5 A				

AVAILABLE FAULT CURRENT: A AIC RATING:

	LTG	REC	MOTR	LG MTR	MISC	KIT	HEAT	SPEC	TOTAL	AMPS
CONNECTED LOAD IN KVA (NLCP)	1.68	0.00	0.00	0.00	0.00	0.00	0.00	0.00	1.7 KVA	5 A
TOTAL CONNECTED LOAD IN KVA:	1.68	0.00	0.00	0.00	0.00	0.00	0.00	0.00	1.7 KVA	5 A
DEMAND LOAD IN KVA:	2.10	0.00	0.00	0.00	0.00	0.00	0.00	0.00	2.1 KVA	6 A

PANEL NOTES:
a
b
c
d
e

PANEL OPTIONS:
MAIN LUGS ONLY

CONFORMED SET

RSA Engineering, Inc.
MECHANICAL AND ELECTRICAL CONSULTING ENGINEERS
2532 Arctic Boulevard, Suite 200
Anchorage, AK 99503 (907) 276-0521
191 Swanson Avenue, Suite 100
Wasilla, Alaska 99654 (907) 373-1021

URS
700 G STREET, SUITE 500
ANCHORAGE, AK 99501
TEL: (907)562-3366
FAX: (907)562-1297

STATE OF ALASKA 49TH TIMOTHY E. HALL EE-9131 REGISTERED PROFESSIONAL ENGINEER

REVISIONS

NO.	BY	DATE	DESCRIPTION

MUNICIPALITY OF SKAGWAY

SKAGWAY SMALL BOAT HARBOR
SKAGWAY, AK

PANEL SCHEDULES

PROJECT No:	26220909
DATE:	8/14/2012
DESIGNED:	MJC
DRAWN BY:	MJC
CHECKED BY:	TEH
SHEET:	E6.2